ONTARIO CLEAN WATER AGENCY
AGENCE ONTARIENNE DES EAUX

OPERATIONAL PLAN

For the Township of Essa Drinking Water Systems

- Angus
- Baxter Distribution
- Thornton

This Operational Plan is designed for the exclusive use of the system(s) specified in this Operational Plan.

This Operational Plan has been developed with OCWA's operating practices in mind and utilizing OCWA personnel to implement it.

Any use which a third party makes of this Operational Plan, or any part thereof, or any reliance on or decisions made based on information within it, is the responsibility of such third parties. OCWA accepts no responsibility for damages, if any, suffered by any third party as a result of decisions made or actions taken based on this Operational Plan or any part thereof.

QEMS

TABLE OF CONTENTS

Reviewed by: Process & Compliance Technician | Approved by: Senior Operations Manager

OP-01 OCWA's Quality & Environmental Management System (QEMS)
OP-02 Quality & Environmental Management System Policy
OP-03 Commitment & Endorsement of OCWA's QEMS & Operational Plan
OP-03A Signed Commitment and Endorsement
OP-04 Quality Management System Representative
OP-05 Document and Records Control
OP-05A Document and Records Control Locations
OP-06 Drinking Water System
OP-06A Angus Well Supply System Description
OP-06B Baxter Distribution System Description
OP-06C Thornton Well Supply System Description
OP-07 Risk Assessment
OP-08 Risk Assessment Outcomes
OP-08A Angus Well Supply System Risk Assessment Outcomes
OP-08B Baxter Distribution System Risk Assessment Outcomes
OP-08C Thornton Well Supply System Risk Assessment Outcomes
OP-09 Organizational Structure, Roles, Responsibilities & Authorities
OP-09A Organizational Structure
OP-10 Competencies
OP-11 Personnel Coverage
OP-12 Communications
OP-13 Essential Supplies and Services
OP-14 Review and Provision of Infrastructure
OP-15 Infrastructure Maintenance, Rehabilitation and Renewal
OP-16 Sampling, Testing and Monitoring
OP-17 Measurement and Recording Equipment Calibration and Maintenance
OP-18 Emergency Management
OP-19 Internal QEMS Audits
OP-20 Management Review
OP-21 Continual Improvement
Schedule "C" Ministry's Director's Directions *Minimum Requirements for Operational Plans*
Angus Well Supply System
Baxter Distribution System
Thornton Well Supply System

1. Purpose

To document OCWA's Quality & Environmental Management System (QEMS). This Operational Plan defines and documents the QEMS for the Township of Essa Drinking Water Systems operated by the Ontario Clean Water Agency (OCWA). It sets out the OCWA's policies and procedures with respect to quality and environmental management in accordance with the requirements of the Province of Ontario's Drinking Water Quality Management Standard (DWQMS).

2. Definitions

Drinking Water Quality Management Standard (DWQMS) – has the same meaning as Quality Management Standard for Drinking Water Systems approved under section 21 of the Safe Drinking Water Act (SDWA).

Operational Plan – means the operational plan required by the Director's Direction.

Quality & Environmental Management System (QEMS) – a system to:
a) Establish policy and objectives, and to achieve those objectives; and
b) Direct and control an organization with regard to quality.

Ministry - means the Ontario government ministry responsible for the administration of the SDWA.

3. Procedure

3.1 The Township of Essa Drinking Water Systems are owned by the Corporation of the Township of Essa. OCWA is the contracted Operating Authority for the Township of Essa Drinking Water Systems, which includes the following facilities:

- Angus Well Supply System
- Baxter Distribution System
- Thornton Well Supply System

3.2 OCWA's Quality & Environmental Management System (QEMS) is structured and documented with the purpose of:

1. Establishing policy and objectives with respect to the effective management and operation of water/wastewater facilities;
2. Understanding and controlling the risks associated with the facility's activities and processes;
3. Achieving continual improvement of the QEMS and the facility's performance.

3.3 The Operational Plan for the facilities listed above fulfils the requirements of Ontario's DWQMS. The 21 QEMS Procedures within this Operational Plan align with the 21 elements of the DWQMS.

4. Related Documents

Ontario's Drinking Water Quality Management Standard, as amended from time to time
All QEMS Procedures and Documents referenced in this Operational Plan

Revision History

Date	Revision #	Reason for Revision
2018-08-31	0	Procedure issued – Information within OP-01 was originally set out in the Main body of OCWA's Operational Plan (last revision 0 dated 2016-06-20). New Purpose, Definitions, Procedure, Related Documents and separate Revision History sections. Addition of new wording (section 3.3) to clarify that the OCWA's Operational Plan now aligns with the 21 elements of the DWQMS.
2024-08-22	1	Procedure updated definition of DWQMS, added definition of Ministry as the Ontario government ministry responsible for drinking water and environmental legislation to alleviate need for future revisions if/when the Ministry experiences name changes, added "as amended from time to time directly following reference to Ontario's DWQMS to point to the most current version of the document, removed watermark.

QUALITY & ENVIRONMENTAL MANAGEMENT SYSTEM (QEMS) POLICY

Reviewed by: Process & Compliance Technician	Approved by: Senior Operations Manager

1. Purpose

To document a QEMS Policy that provides the foundation for OCWA's Quality & Environmental Management System.

2. Definitions

Quality Management System Policy – means the policy described in Element 2 developed for the Subject System or Subject Systems

3. Procedure

3.1 The Ontario Clean Water Agency, its Board of Directors, Officers and entire staff are committed to the principles and objectives set out in our QEMS Policy.

OCWA's Policy is to:

- Deliver safe water and wastewater services that protect public health, the environment, and the sustainability of communities.
- Comply with applicable legislation and regulations.
- Promote client, consumer and stakeholder confidence through service excellence, effective communications and reporting.
- Train staff on their QEMS responsibilities.
- Maintain and continually improve the QEMS.

Originally issued as Environmental Policy on June 8, 1995
Last revised, approved by OCWA's Board of Directors on April 4, 2024
(This policy is annually reviewed)

3.2 Our Board of Directors, Officers and entire staff will act to ensure the implementation of this Policy and will monitor progress of the Quality & Environmental Management System (QEMS).

3.3 OCWA's QEMS Policy is readily communicated and available to all OCWA personnel, through OCWA's intranet. The Owner and members of the public can access the policy through OCWA's public website (www.ocwa.com). A hardcopy of the QEMS Policy is posted as specified in the OP-05 Document and Records Control procedure.

3.4 Essential suppliers and service providers are advised of OCWA's QEMS Policy as per the OP-13 Essential Supplies and Services procedure.

3.5 Corporate Compliance coordinates the annual review and approval of the QEMS Policy by the Board of Directors and communicates the approval to all OCWA employees via an electronic communication.

3.6 The current version of the policy indicates the date of the last revision and that the policy is annually reviewed. Electronic and hard-copy documents that include the QEMS Policy will only be required to be updated in years when the Policy has been revised. A complete review/revision history of the QEMS Policy (documenting the annual policy review and/or revision approval date) is accessible to all staff on OCWA's intranet and is available upon request for external stakeholders.

4. Related Documents

Current QEMS Policy (Posted on OCWA's intranet and internet)
QEMS Policy Revision History (Posted on OCWA's intranet)
OP-05 Document and Records Control
OP-13 Essential Supplies and Services

5. Revision History

Date	Revision #	Reason for Revision
2018-08-31	0	Procedure issued – Sections 3.4, 3.5 and 3.6 were added to the information originally set out in the main body of OCWA's Operational Plan (last revision 0 dated 2016-06-20). New sections: Purpose, Definitions, Procedure, Related Documents and a separate Revision History. Minor revisions to wording in section 3.3 to reference location of posted copy of the policy. Added sections on how annual policy review is conducted (sections 3.5 and 3.6) and reference to OP-13 ESS (section 3.4). The full revision history for the QEMS policy is available on OCWA's intranet.
2023-11-29	1	Replace reference to OCWA's intranet site with OCWA's SharePoint site.
2024-08-24	2	The first bullet of the QEMS Policy (approved in 2016) was revised to align with OCWA's updated Mission statement. s. 3.3 and 3.6 were modified to add information/clarify how to access the QEMS Policy and the Policy revision history document.

COMMITMENT AND ENDORSEMENT

Reviewed by: Process & Compliance Technician	Approved by: Senior Operations Manager

1. Purpose

To document the endorsement of the Operational Plan for the Township of Essa Drinking Water Systems by OCWA Top Management and the Corporation of the Township of Essa (Owner) and to set out when re-endorsement would be required.

2. Definitions

Top Management – a person, persons or a group of people at the highest management level within an Operating Authority that makes decisions respecting the QMS and recommendations to the Owner respecting the Subject System or Subject Systems

3. Procedure

3.1 The Operational Plan is provided to OCWA Top Management and to the Owner for endorsement. The signed written endorsement is presented in Appendix OP-03A. At a minimum, two members of Top Management must endorse the Operational Plan; however, the Operational Plan is made available to all members of Top Management in the specified document control location (refer to OP-05 Document and Records Control). Endorsement by OCWA's Top Management is represented by the South Simcoe Senior Operations Manager, the Safety, Process and Compliance Manager and/or Regional Hub Manager.

3.2 Any major revision of the operational plan will be re-endorsed by OCWA Top Management and the Owner. Major revisions include:

1. A revision to OCWA's QEMS Policy;
2. A change to both representatives of the facility's Top Management and/or both of the Owner's representatives that endorsed the Operational Plan;
3. A modification to the drinking water system processes/components that would require a change to the description in OP-06 Drinking Water System;
4. The addition of a drinking water subsystem owned by the same Owner to this operational plan.

Any other changes would be considered a minor change and would not require the Operational Plan to be re-endorsed.

4. Related Documents

OP-03A Signed Commitment and Endorsement
OP-05 Document and Records Control
OP-06 Drinking Water System

5. Revision History

Date	Revision #	Reason for Revision
2018-08-31	0	Procedure issued – Information within OP-03 was originally set out in the main body of OCWA's Operational Plan (last revision 0 dated 2016-06-20). Procedure provides information on who from Top Management endorses the Operational Plan (section 3.1); when owner re-endorsement is sought and 'criteria' as to what is considered a major revision to the Plan (section 3.2). The Owner and Top Management sign-off section is Appendix OP-03A.
2024-01-15	1	Updated section 3.1 to say that endorsement of the Operational Plan by OCWA Top Management is represented by "the South Simcoe Senior Operations Manager, the Safety, Process and Compliance Manager and/or the Regional Hub Manager".

QEMS Ontario Clean Water Agency	**OPERATIONAL PLAN** Township of Essa Drinking Water Systems	QEMS Doc: OP-03A Rev Date: 2024-08-22 Rev No: 7 Pages: 1 of 1

SIGNED COMMITMENT AND ENDORSEMENT

This Operational Plan sets out the framework for OCWA's Quality & Environmental Management System (QEMS) that is specific and relevant to your drinking water system(s) and supports the overall goal of OCWA and the Corporation of the Township of Essa (Owner) to provide safe, cost-effective drinking water through sustained cooperation. OCWA will be responsible for developing, implementing, maintaining and continually improving its QEMS with respect to the operation and maintenance of the Township of Essa Drinking Water Systems and will do so in a manner that ensures compliance with applicable legislative and regulatory requirements.

Through the endorsement of this Operational Plan, the Owner commits to work with OCWA to facilitate this goal.

OCWA Top Management Endorsement

Charlie Bowler
Senior Operations Manager, South Simcoe Hub

Feb 7, 2025
Date

Caralynn McRae
Regional Hub Manager, Georgian Highlands Region

02/10/2025
Date

Owner Endorsement

John Kolb
Manager of Public Works

Feb 10/25
Date

Michael Mikael
Chief Administrative Officer

Feb-10-2025
Date

The endorsement above is based on the Operational Plan that was current as of the revision date of this document (OP-03A).

QUALITY & ENVIRONMENTAL MANAGEMENT SYSTEM (QEMS) REPRESENTATIVE

Reviewed by: Process & Compliance Technician	Approved by: Senior Operations Manager

1. Purpose

To identify and describe the specific roles and responsibilities of the QEMS Representatives for the Township of Essa Drinking Water Systems.

2. Definitions

None

3. Procedure

3.1 The role of QEMS Representative for the Township of Essa Drinking Water Systems is the Process and Compliance Technician (PCT). The Safety, Process and Compliance Manager (or alternate PCT) will act as an alternate QEMS Representative when required.

3.2 The QEMS Representative is responsible for:

- Administering the QEMS for the Township of Essa Drinking Water Systems by ensuring that processes and procedures needed for the facility's QEMS are established and maintained;
- Reporting to Top Management on the facility's QEMS performance and identifying opportunities for improvement;
- Ensuring that current versions of documents related to the QEMS are in use;
- Promoting awareness of the QEMS to all operations personnel; and
- In conjunction with Top Management, ensuring that operations personnel are aware of all applicable legislative and regulatory requirements that pertain to their duties for the operation of the system.

4. Related Documents

None

5. Revision History

Date	Revision #	Reason for Revision
2018-08-31	0	Procedure issued – Information within OP-04 was originally set out in the main body of OCWA's Operational Plan (last revision 0 dated 2016-06-20. New Purpose, Definitions, Procedure, Related Documents and separate Revision History sections. Change to responsibilities: Operations Manager no longer considered QEMS Representative and SPC Manager to act as alternate as required (section 3.1); added wording to clarify shared responsibilities for Top Management and QEMS Representative to ensure operations personnel are aware of applicable legislative and regulatory requirements (section 3.2).
2025-01-16	1	Removed watermark

DOCUMENT AND RECORDS CONTROL

1. Purpose

To describe how OCWA's QEMS documents are kept current and how QEMS documents and records are kept legible, readily identifiable, retrievable, stored, protected, retained and disposed of. Applies to QEMS Documents and QEMS records pertaining to the Township of Essa Drinking Water Systems as identified in this procedure.

2. Definitions

Document – includes a sound recording, video tape, film, photograph, chart, graph, map, plan, survey, book of account, and information recorded or stored by means of any device

Record – a document stating results achieved or providing proof of activities performed

QEMS Document – any document required by OCWA's QEMS as identified in this procedure

QEMS Record – any record required by OCWA's QEMS as identified in this procedure

Controlled – managed as per the conditions of this procedure

Retention Period – length of time that a document or record must be kept; starts from the date of issue for QEMS records or from the point of time when a QEMS document is replaced by a new or amended document

3. Procedure

3.1 Documents and records required by OCWA's QEMS and their locations are listed in Appendix OP-05A Document and Records Control Locations.

3.2 Internally developed QEMS documents and QEMS records (whenever possible) are generated electronically to ensure legibility and are identified through a header/title and revision date. Handwritten records must be legible and permanently rendered in ink or non-erasable marker.

3.3 Controls for the Operational Plan include the use of an authorized approval and a header on every page that includes a title, alpha-numeric procedure code, revision date, revision number and page numbers. A revision history is also included at the end of each procedure.

The authorized personnel responsible for the review and approval of this Operational Plan are:

Review	Process & Compliance Technician
Approval	Senior Operations Manager and/or Safety, Process and Compliance Manager

The QEMS Representative ensures that updated documents are provided to the above authorized personnel for review or approval prior to issuance.

Authorized personnel authenticate their review/approval of this Operational Plan by using a written signature (scanned or hard copy), using an electronic signature or via email.

3.4 The QEMS Representative is responsible for ensuring that current versions of QEMS documents are being used at all times. Current QEMS documents and records are readily accessible to operations personnel and to internal and external auditors/inspectors at established document control locations. The currency of internal documents is ensured by comparing the date on the document to that of the master hardcopy and/or electronic copy residing in the designated document control location(s) specified in Appendix OP-05A.

Document control locations are established in areas that provide adequate protection to prevent unauthorized use/access, damage, deterioration or loss of QEMS documents and records. Copies of QEMS documents and records located outside of designated control locations are considered uncontrolled.

3.5 Access to OCWA's computer network infrastructure is restricted through use of individually-assigned usernames and passwords and local area servers. Network security is maintained by OCWA's Information Technology department through a number of established mechanisms and practices such as daily back-up of files stored on servers, password expiry, limitations on login attempts, multi-factor authentication and policies outlining specific conditions of use.

Access to facility QEMS records contained within internal electronic databases and applications (e.g., Wonderware, OPEX, PDM, WMS) is administered by designated application managers/trustees, requires the permission of Operations Management and is restricted through use of usernames and passwords. Records are protected by means of regular network back-ups of electronic files stored on servers and/or within databases.

SCADA records are maintained as per Appendix OP-05A and are accessible to all staff when required.

3.6 Any employee of the drinking water system may request, in writing to the QEMS Representative, a revision be made to improve an existing internal QEMS document or the preparation of a new document. Written requests should indicate the reason for the requested change. The need for new or updated documents may also be identified through the Management Review or system audits.

The QEMS Representative communicates any changes made to QEMS documents to relevant operations personnel and coordinates related training (as required). Changes to corporately controlled QEMS documents are communicated and distributed to facility QEMS Representatives by OCWA's Corporate Compliance Group through e-mails, memos and/or provincial, regional hub/cluster or facility-level training sessions.

3.7 When a QEMS document is superseded, the hardcopy and the electronic copy of the document (as applicable) are promptly removed from the applicable designated document control locations specified in OP-05A. The QEMS Representative ensures that the hardcopy and electronic copy are disposed of or retained (as appropriate).

3.8 The authorized method for disposal of hardcopy documents and records after the specified retention requirements have been met is shredding.

The authorized method for disposal of electronic documents and records after the specified retention requirements have been met is deleting.

3.9 QEMS documents and records are retained in accordance with applicable regulations and legal instruments. Relevant regulatory and corporate minimum retention periods are as follows:

Type of Document/Record	Minimum Retention Time	Requirement Reference
Operational Plan (OP-01 to OP-21 and appendices, including Schedule "C" – Subject System Description Form) FEP Long term forecast of major infrastructure maintenance, rehabilitation and renewal activities Sampling plan/schedule/ calendar	10 years	Director's Direction under SDWA
Internal QEMS Audit Results	10 years	OCWA Requirement
External QEMS Audit Results	10 years	OCWA Requirement
Management Review Documentation	10 years	OCWA Requirement
Documents/records required to demonstrate conformance with the DWQMS (specifically documents/records listed in OP-05A)	3 years*if no specified legislative requirement identified in this table or in the facility's legal instruments *	OCWA Requirement
Log Books or other record-keeping mechanisms	5 years	O. Reg. 128/04
Training Records for water operators and water quality analysts	5 years	O. Reg. 128/04
Operational checks, sampling and testing (e.g., chlorine residuals, turbidity, fluoride, sampling records), microbiological sampling and testing and chain of custodies	2 years	O. Reg. 170/03
Schedule 23 & 24 sampling, chain of custodies and test results	6 years LMR 15 years SMR	O. Reg. 170.03

Type of Document/Record	Minimum Retention Time	Requirement Reference
THM, HAA, nitrates, nitrites and lead program (including pH and alkalinity) sampling, chain of custodies, and test results, Section 11 Annual Reports and Schedule 22 Summary Reports	6 years	O. Reg. 170/03
Sodium sampling, chain of custody and test results and related corrective action records/reports, 60 month fluoride sampling, chain of custody and test results (if the system doesn't fluoridate), Engineering Reports, GUDI/Non-GUDI Reports	15 years	O. Reg. 170/03
Corrective action records/reports for E. Coli, Total Coliforms and bacterial species	2 years	O. Reg. 170/03
Corrective action records/reports for chemical and radiological parameters under SDWA O. Reg. 169/03, pesticides not listed under O. Reg. 169/03 and health-related parameters in an order or approval	6 years LMR 15 years SMR	O. Reg. 170/03
Flow Meter Calibration Records, Analyzer Calibration Reports Maintenance Records/Work Orders	2 years	O. Reg. 170/03
Records required by or created in accordance with the Municipal Drinking Water Licence (MDWL) or Drinking Water Works Permit (DWWP). Except records specifically referenced in O. Reg. 170/03 or otherwise specified in the MDWL or DWWP.	5 years	MDWL
Ministry forms referenced in the DWWP, including Form 1, Form 2, Form 3 and Director Notifications (applies to forms that have been completed by OCWA as the authorized by the owner)	10 years	DWWP

3.10 The Operational Plan is reviewed for currency by the QEMS Representative during internal/external audit and Management Review processes. Other QEMS-related documents are reviewed as per the frequencies set out in this Operational Plan or as significant changes (e.g., changes in regulatory requirements, corporate policies or operational processes and/or equipment, etc.) occur. QEMS documents and records are reviewed for evidence of control during each internal system audit as per OP-19 Internal QEMS Audits.

4. Related Documents

OP-05A Document and Records Control Locations
OP-19 Internal QEMS Audits
OP-20 Management Review Minutes

5. Revision History

Date	Revision #	Reason for Revision
2016-06-20	0	Procedure issued.
2018-08-31	1	Procedure issued following new template from Corporate Compliance. QP-01 procedure renamed OP-05. Removed Responsibilities and Scope sections. Moved the former Table 1 (Designated location for documents and records required by OCWA's QEMS) to its own appendix (OP-05A). Assigned responsibility for ensuring current versions of QEMS documents are being used to the QEMS Representative (section 3.4). Clarified that requests for revisions/new QEMS documents are made to the QEMS Representative (section 3.6). Moved the former Table 2 (Relevant regulatory and corporate minimum retention periods) to be part of section 3.9 and expanded on the minimum retention times for documents and records required to demonstrate compliance with legislation. Other minor wording changes.
2022-03-31	2	Procedure updated 2022-03-31, Rev 2. Reason for Revision - Added: clarity to version control requirements to align with the Director's Directions dated May 2021, detail to the approval process for Operational Plan, clarity on how electronic documents are handled and [the process for verifying secure shredding of documents and records]; Updated: the table in section 3.9 (clarified minimum retention time requirements for documents/records required to demonstrate conformance with the DWQMS, added forms required by the MDWL and DWWP, including their minimum retention times and requirement reference)].
2024-01-15	3	Updated section 3.3 to include that Approval can also come from Safety, Process and Compliance Manager in addition to the Senior Operations Manager
2024-08-22	4	Procedure updated as follows: added multi factor authentication to 3.5, section 3.9 table revised to include Schedule 23 & 24 records retention times for Large Municipal Residential (LMR) and Small Municipal Resident (SMR) systems, added chain of custody as record for retention for various sampling requirements, lead program clarified to include pH and alkalinity; added GUDI/Non-GUDI Reports, minor wording and type-o's, removed watermark.

DOCUMENT AND RECORDS CONTROL LOCATIONS

Reviewed by: Process & Compliance Technician | Approved by: Senior Operations Manager

Designated locations for documents and records required by OCWA's QEMS

Type of Document/Record	Designated Document Control Location (HC = Hardcopy, E = Electronic)
Internal QEMS Documents	
Operational Plan (OP-01 to OP-21 and appendices, including Schedule "C" – Subject System Description Form)	HC – at Township of Essa Municipal Office E – OCWA's Hub Server
QEMS Policy	E - OCWA's Sharepoint site and public website HC - plaque posted at Angus WPCP
Facility Emergency Plans	HC – at the plants E – OCWA's Hub Server
Corporate Emergency Response Plan (CERP)	E - OCWA's Sharepoint site
Standard Operating Procedures (referenced in Operational Plan and QEMS Procedures)	HC – in Facility Emergency Binder located at each of the plants E – OCWA's Hub Server
Essential Supplies & Services List	HC – in Facility Emergency Binder located at each of the plants E – OCWA's Hub Server
Shift/Vacation Schedule	HC – posted at Angus WPCP; updated as requests are made E – OCWA's Hub Server
On-call Schedule	HC – posted at Angus WPCP E – OCWA's Hub Server
Overall Responsible Operator Posting (ORO)	HC – at the plants E – OCWA's Hub Server
Sampling Schedule/Plan/Calendar	HC – posted at Angus WPCP E – OCWA's Hub Server
Chain of Custody Forms	E – OCWA's Hub Server
Contact Time (CT) Charts & Calculations	HC – posted at each of the plants E – OCWA's Hub Server
External QEMS Documents	
Maintenance/equipment manuals	HC – at each of the plants
Engineering System schematics/plans/drawings/ diagrams	HC – at each of the plants E- OCWA's Hub Server
Municipal Drinking Water Licence	HC – in Facility Emergency Binder located at each of the plants E – OCWA's Hub Server
Drinking Water Works Permit	HC – in Facility Emergency Binder located at each of the plants E – OCWA's Hub Server
Permit to Take Water	HC – in Facility Emergency Binder located at each of the plants E – OCWA's Hub Server
Operator certificates	HC – posted at Angus WPCP

DOCUMENT AND RECORDS CONTROL LOCATIONS

Reviewed by: Process & Compliance Technician | Approved by: Senior Operations Manager

Type of Document/Record	Designated Document Control Location (HC = Hardcopy, E = Electronic)
	E – OCWA's Hub Server
AWWA Standards	E - \\Torwan\PCT\AWWA Standards
Ontario's Watermain Disinfection Procedure	E – https:www.ontario.ca
DWQMS Standard	E - https://www.ontario.ca
ANSI/NSF product registration documentation for Chemicals/Materials Used	E – OCWA's Hub Server
Applicable federal and provincial legislation and municipal by-laws	Online at www.e-laws.gov.on.ca
Operations Manual Original Equipment Manuals (OEM)	HC – at each of the plants
Source Water Protection Plan	HC – in Facility Emergency Binder located at each of the plants E – OCWA's Hub Server
QEMS Records	
Monthly Check Sheets (Rounds sheets)	HC - at the plants, at the Angus WPCP E – OCWA's Hub Server Process data maintained electronically through PDM
Facility Operations Logbook(s)	E- Facility Logbooks maintained electronically through E - eRIS eLOG software https://ocwa.eriscloud.com/ HC – emergency back-up logbooks at the plants
Visitor's Logbook	HC – at the plants
Plant Tour Records	E – OCWA's Hub Server (as needed- if an applicable tour occurred)
Operator training records	E – OCWA's Hub Server E- maintained in OCWA's Training Summary Database
Maintenance records	E - maintained in WMS
Internal Calibration records	E – OCWA's Hub Server E - maintained through WMS
External Calibration records	E – OCWA's Hub Server
Chain Custodies	E – OCWA's Hub Server
Laboratory analyses	Electronic reports from Laboratory – OCWA's Hub Server E – maintained through PDM
Additional Sampling records	E – OCWA's Hub Server
In-house lab results	E – OCWA's Hub Server E – maintained through PDM
SCADA records (Wonderware, OCWA)	E - maintained through Wonderware
SCADA Records (Plant SCADA, Client Owned)	E – OCWA's Hub Server

DOCUMENT AND RECORDS CONTROL LOCATIONS

Reviewed by: Process & Compliance Technician | Approved by: Senior Operations Manager

Type of Document/Record	Designated Document Control Location (HC = Hardcopy, E = Electronic)
Internal QEMS audit reports	E – OCWA's Hub Server
External audit reports	E – OCWA's Hub Server
Ministry Inspection Reports	E – OCWA's Hub Server
Management Review documentation	E – OCWA's Hub Server
(Preventive/Corrective) / Summary Table of Action Items (Preventive/Corrective records)	E – OCWA's Hub Server
Internal QEMS Communications	E – OCWA's Hub Server and/or email
External QEMS Communications (including essential suppliers and service providers)	E – OCWA's Hub Server and/or email
Annual Reports	E – OCWA's Hub Server E- Township of Essa Municipal Website
Summary Reports for Municipalities	E – OCWA's Hub Server E- Township of Essa Municipal Website
AWQI Reports	E – OCWA's Hub Server
Infrastructure review (capital/maintenance works recommendations)	E – OCWA's Hub Server
Community complaint records	E – maintained through WMS
Call In/Call Back/Call Out Reports	E – maintained through WMS E – Daily review sent via email
Results of emergency test exercises/emergency response debriefs	E – OCWA's Hub Server
Ministry forms referenced in the Drinking Water Works Permit, including Form 1, Form 2, Form 3 and Director Notifications (applies to forms that have been completed by OCWA as the authorized by the owner)	E – OCWA's Hub Server

DOCUMENT AND RECORDS CONTROL LOCATIONS

Reviewed by: Process & Compliance Technician	Approved by: Senior Operations Manager

Revision History

Date	Revision #	Reason for Revision
2018-08-31	0	Appendix issued; Table was originally included within the Document and Records Control Procedure (QP-01) (last revision 0 dated 2016-06-20). Added additional types of documents and records that require document control. Changed “Georgian Bay Hub Office” to “Georgian Highlands Region Office (Wasaga Beach).” Updated Table to reflect current document control locations.
2018-11-23	1	Added one Operational Plan hard copy location at the Township of Essa Municipal Office and a hard copy or electronic version “at other publicly accessible location in the geographical area served by the subject system” (at the choosing of the Municipality). Changed QEMS Reference Manual from hard copy to electronic and OCWA Intranet. Removed hard copies of licences and permits. Removed hard copy version for management review documents, annual reports, and summary reports. Added electronic version for AWQI. Removed “Wasaga Beach” from Georgian Highlands Region Office.
2019-03-13	2	Added Overall Responsible Operator Postings and Contact Time (CT) Charts and Calculations as “Internal QEMS Documentation.”
2021-06-09	3	Community complaint records now maintained through Work Management System
2022-01-10	4	Added Angus WPCP as a hard copy document location for operator certificates
2022-03-25	5	Updated QEMS Facility Record Logbooks to include new online logbook system. Electronic Facility Logbooks maintained through E - eRIS eLOG software https://ocwa.eriscloud.com/ effective January 1st, 2022 a backup emergency logbook can also be found at the plants.
2022-03-31	6	Added: instructions (specify exact location of documents/records and list maintenance records not in WMS), clarity on which documents are included under the Operational Plan, new documents/records (Watermain Disinfection Procedure, results of emergency test exercises/emergency response debriefs and Ministry forms referenced in the Drinking Water Works Permit) and clarity to external communications and inspection reports; Removed: reference to QEMS Reference Manual and OCWA’s intranet (replaced with OCWA’s Sharepoint site). Added row to header to show who reviewed and approved the document. Removed any references to “Georgian Highlands Region Office” and replaced with either Angus WPCP or Wasaga Beach WPCP dependent upon where the applicable records and control HC location is.

DOCUMENT AND RECORDS CONTROL LOCATIONS

Reviewed by: Process & Compliance Technician	Approved by: Senior Operations Manager

2024-01-15	7	Reviewed all designated document control locations as per the 2023 internal audit recommendation. Updated all document locations as necessary. Removed all references to Wasaga Beach WPCP- updated locations to Angus WPCP as applicable. Added in the Township of Essa Municipal website for annual and summary reports. Updated OPEX Database Action Plan Records (Preventive/Corrective)/Action Plan Summary Spreadsheet description as it is no longer captured in OPEX database. Updated references of Hub Drive (S:/) to OCWA's Hub Server.
2024-08-29	8	Appendix updated with MECP revised to Ministry, updated Corporate Emergency Plan (CERP) name, minor wording, removed watermark.

1. Purpose

To document the following for the Township of Essa Drinking Water Systems:

- The name of the Owner and Operating Authority; and
- Provide a description of the system, including all applicable water sources, treatment system processes and distribution system components.

2. Definitions

Distribution System - means the part of a drinking water system that is used in the distribution, storage or supply of water and that is not part of a treatment system.

Primary Disinfection - means a process or series of processes intended to remove or inactivate human pathogens such as viruses, bacteria and protozoa in water.

Secondary Disinfection - means a process or series of processes intended to provide and maintain a disinfectant residual in a drinking water system's distribution system, and in plumbing connected to the distribution system, for the purposes of:

(a) protecting water from microbiological re-contamination;
(b) reducing bacterial regrowth;
(c) controlling biofilm formation;
(d) serving as an indicator of distribution system integrity; and includes the use of disinfectant residuals from primary disinfection to provide and maintain a disinfectant residual in a drinking water system's distribution system for the purposes described in clauses (a) to (d).

Treatment System - means any part of a drinking water system that is used in relation to the treatment of water and includes,

(a) any thing that conveys or stores water and is part of a treatment process, including any treatment equipment installed in plumbing,
(b) any thing related to the management of residue from the treatment process or the management of the discharge of a substance into the natural environment from the system, and
(c) a well or intake that serves as the source or entry point of raw water supply for the system;

3. Procedure

3.1 The Township of Essa Drinking Water Systems are owned by the Corporation of the Township of Essa. OCWA is the contracted Operating Authority for the Township of Essa Drinking Water Systems.

3.2 The descriptions of the Township of Essa Drinking Water Systems are outlined in Appendices OP-06A to OP-06C, where:

- OP-06A is Angus Well Supply System;
- OP-06B is Baxter Distribution System;

- OP-06C is Thornton Well Supply System;

3.3 Each description will include the following information:

- Drinking Water System Overview
- Source Water
  - *General Characteristics*
  - *Common Fluctuations*
  - *Threats*
  - *Operational Challenges*
- Treatment System Description
- Treatment System Process Flow Chart
- Description of the Distribution System Components

4. Related Documents

Operations & Maintenance Manual
Nottawasaga Valley Source Protection Area Approved Assessment Report
Site Location Map
System Schematic

5. Revision History

Date	Revision #	Reason for Revision
2018-08-31	0	Procedure issued – Information within OP-06 was originally set out in the Main body of OCWA's Operational Plan (last revision 0 dated 2016-06-20). New Purpose, Definitions, Procedure, Related Documents and separate Revision History sections. Updates based on revisions to DWQMS (e.g. removal of critical upstream or downstream processes, separation of systems that provide primary and/or secondary disinfection and systems that do not, for systems that are connected to another system with different owners, must now include which system is relied upon to ensure the provision of safe drinking water). Separated the DWS descriptions from the body of this procedure into Appendices. Changed order of system description to follow the process (e.g., source water first, then treatment, then distribution).
2025-01-16	1	Included statement about the ownership and operating authority- added 3.1 to 3.3 section designations to OP-06. Removed watermark.

Drinking Water System Overview

The Angus Drinking Water System is owned by the Township of Essa and operated by the Ontario Clean Water Agency (OCWA). The Angus Drinking Water System is classified as a Large Municipal Drinking Water System, servicing an approximate population of 14,503 persons (based on 2021 Canada Census Data). The system is comprised of three pumphouses, including the Mill Street Pumphouse, McGeorge Pumphouse and Brownley Pumphouse, which draw water from six production wells, along with receiving water from the Collingwood/Alliston pipeline within the Mill Street Pumphouse. The three facilities supply water through a common distribution system.
There are reservoirs located at all three pumphouses and they provide storage and fire flows in the system. The six municipal water wells that serve the Town of Angus, which lie at various depths in a deep ground aquifer system, all appear to be well-protected from surficial activities. This assumption is supported by the available water analyses, which indicate good quality.

Source Water

General Characteristics
The raw water source for the Mill Street treatment plant is one (1) ground water well located just to the south of the pumphouse. The raw water source for the McGeorge treatment plant is two (2) ground water wells housed inside the pumphouse. The raw water source for the Brownley treatment plant is three (3) ground water wells located outside the pumphouse. These groundwater wells are not under the influence of surface water (GUDI). Bacteriological analysis of the raw water indicates a source of very good quality. In 2004, the Township of Essa participated in the South Simcoe Regional Groundwater Studies conducted in part by the Nottawasaga Valley Conservation Authority, Golder Associates and the Ministry of the Environment to identify recharge areas, capture zones, well head protection areas and potential contamination areas to groundwater resources.

Common Fluctuations
There appears to be no common fluctuations within the Angus Well Supply System.

Threats
Mill Street Well: The 25-year wellhead protection area (WHPA) for the Mill Street well is mainly contained within the deep aquifer system known as Aquifer A3. The primary concern for this well is the potential for contaminants to rapidly migrate into this aquifer through poorly constructed or improperly abandoned wells. The Mill Street well is located directly over a closed landfill site. The area within the WHPA is largely open space with some residential land use to the northeast. A small tributary stream to the Nottawasaga River and a railroad track are located over the western part of the WHPA.

McGeorge Wells: Like the Mill Street wells the capture zones are completely contained within the deep aquifer system and like the Mill Street well the main concern for these wells is the potential for contaminants to rapidly migrate into this aquifer through poorly constructed or improperly abandoned wells. The land use within the immediate vicinity of the McGeorge wells is residential and open space. Agricultural operations are identified within 2.5 km of the wellfield. Also, the well head protection area passes under two railways and is located just to the south of an industrial

subdivision serviced by one of these railways. The railway presents a potential contamination source by way of a spill.

Brownley Wells: Brownley wells are constructed in a confined fine to medium-grained sand aquifer system. The primary concern for this well is the potential for contaminants to rapidly migrate into this aquifer through poorly constructed or improperly abandoned wells. The land use within the immediate vicinity of the Brownley wells is residential and open space. The Nottawasaga River lies approximately 750 m west of the wells and is not hydraulically connected. Agricultural activities lie to the east of the well field.

Operational Challenges
There appears to be no significant operational challenges with respect to the source water for the Angus Well Supply System.

Treatment System Description

McGeorge (Centre Street) Pumphouse

The raw water for the McGeorge Pumphouse is supplied from two 203 mm diameter drilled groundwater wells (Well #1 and Well #2) capable of providing up to 2,627 m^3/day of potable water. As groundwater flows out of the (artesian) wells, pumps are automatically activated to treat the water with sodium silicate (for iron sequestration) and sodium hypochlorite (for primary and secondary disinfection) and the treated water is stored in two underground reservoirs with capacities of 95 m^3 and 157 m^3 respectively. Flow is measured prior to entering the distribution system via high lift pumps. Online monitoring equipment continuously monitors chlorine residual, turbidity and flow rates. Flow and process data is recorded on an SM1000 data logger and a Red Lion data logger. The recorded data is downloaded and stored on the main server at Angus WPCP. The system is alarmed for numerous parameters and monitored by Huronia Alarms in Midland, Ontario. This pumphouse is equipped with a 64 kW diesel generator and auto switch over to provide stand by power in the event of a power failure.

Mill Street Pumphouse
The Mill Street Pumphouse is located at 28 Mill Street in Angus. Raw Water is supplied from one drilled groundwater well (Well 1). As groundwater is pumped from the well, chemical feed pumps add sodium silicate (for iron sequestering) and sodium hypochlorite (for primary disinfection). Treated water is stored in two underground reservoirs, with a capacity of 2,500 m^3 and 902 m^3 respectively. Flow is measured before entering the reservoir and as the treated water enters the distribution system. Online monitoring equipment continuously monitors chlorine residual, turbidity and flow rates. Flow and process data is recorded on an SM1000 data logger and a Red Lion data logger. The recorded data is downloaded and stored on the main server at Angus Water Pollution Control Plant (WPCP). The system is alarmed for numerous parameters and monitored by Huronia Alarms in Midland, Ontario. This pumphouse is equipped with a 400 kW diesel generator and auto switch over to provide stand by power in the event of a power failure.

Note: The Mill Street Pumphouse receives water from the Collingwood (Raymond A. Barker Ultrafiltration Plant) Water Treatment Plant via the Collingwood to Alliston regional pipeline, which

is also known as the New Tecumseth pipeline. The Corporation of the Town of Collingwood owns and operates the Collingwood Drinking Water system, which supplies treated drinking water to the Town of Collingwood and the Town of the Blue Mountains, or into the Regional Pipeline, which then supplies water to the Town of Collingwood and the Town of New Tecumseth. The Township of Essa has a subcontract with the Town of New Tecumseth, which allows for the Baxter Distribution System (also located in the Township of Essa) to take up to 400 m^3/day of water from the Regional pipeline. The water towers at Baxter DS will take water, up to 400 m^3/day, until full and if 400 m^3 is not needed, then the remaining balance of water flows to Angus DWS into the Mill Street Water Treatment Plant reservoir.

Brownley Pumphouse

The Brownley Pumphouse is located at 8610 5th Line. Raw Water is supplied from two 200 mm and one 150 mm diameter drilled groundwater wells (Well #4, Well #5 and Well #6) capable of providing up to 4,251 m^3/day of potable water. As groundwater is pumped from the wells, chemical feed pumps are automatically activated to add sodium silicate (for iron sequestering) and sodium hypochlorite (for primary disinfection). Treated water is stored in one (1) in-ground reservoir, with a capacity of 2,500 m^3. Flow is measured before entering the reservoir and as the treated water enters the distribution system via three (3) high lift pumps. Online monitoring equipment continuously monitors chlorine residual and flow rates. Flow and process data is recorded on an SM1000 data logger and a Red Lion data logger. The recorded data is downloaded and stored on the main server at Angus WPCP. The system is alarmed for numerous parameters and monitored by Huronia Alarms in Midland, Ontario. This pumphouse is equipped with a 400 kW diesel generator and auto switch over to provide stand by power in the event of a power failure.

Treatment System Process Flow Chart

Refer to the next three pages for the Process Flow Diagrams of the Angus Well Supply System; the first being the Mill Street Pumphouse, the second being the McGeorge Pumphouse, and the third being the Brownley Pumphouse.

Description of the Distribution System Components

The Angus Well Supply System is classified as a Class II Water Distribution and Supply System. The distribution system services an estimated population of 14,503 persons. The distribution system infrastructure consists of various lengths, material types, and diameters of watermain throughout the system. There are approximately 320 hydrants, over 500 valves, and approximately 10 locked above-grade sample stations.

Revision History

Date	Revision #	Reason for Revision
2018-08-31	0	Procedure issued – Information within OP-06A was originally set out in the Main body and tabs of OCWA's Operational Plan (last revision 0 dated 2016-06-20). Separated the DWS descriptions from the body of this procedure into Appendices. Changed order of system description to

Date	Revision #	Reason for Revision
		follow the process (e.g., source water first, then treatment, then distribution). Completed all sections: source water, treatment system description, treatment system process flow chart, and description of distribution system components.
2019-03-13	1	Updated with the latest population estimate and number of service connections. Red Lion data logger added to each pumphouse. Alarm monitoring details added to Brownley pumphouse. Specified “primary” disinfection for each pumphouse.
2022-01-10	2	Removed reference to the term “periodically” when referring to data logger data being downloaded and stored on the main server as per internal audit recommendation. Updated population estimates and service connections based on the current water systems for Angus.
2024-01-15	3	Updated population numbers based on 2021 Census Canada Data information. Included section at the beginning detailing the Owner and Operator information. Removed reference to Wasaga Beach WPCP-updated to Angus WPCP. General formatting changes. Updated the section on the regarding the Collingwood/New Tecumseth Regional Pipeline as per External Audit recommendation.
2025-03-12	4	Updated references to 100 m^3/day (New Tecumseth pipeline) to 400 m^3/day as per the new agreed upon amount between the Townships to accommodate increased populations in Baxter.

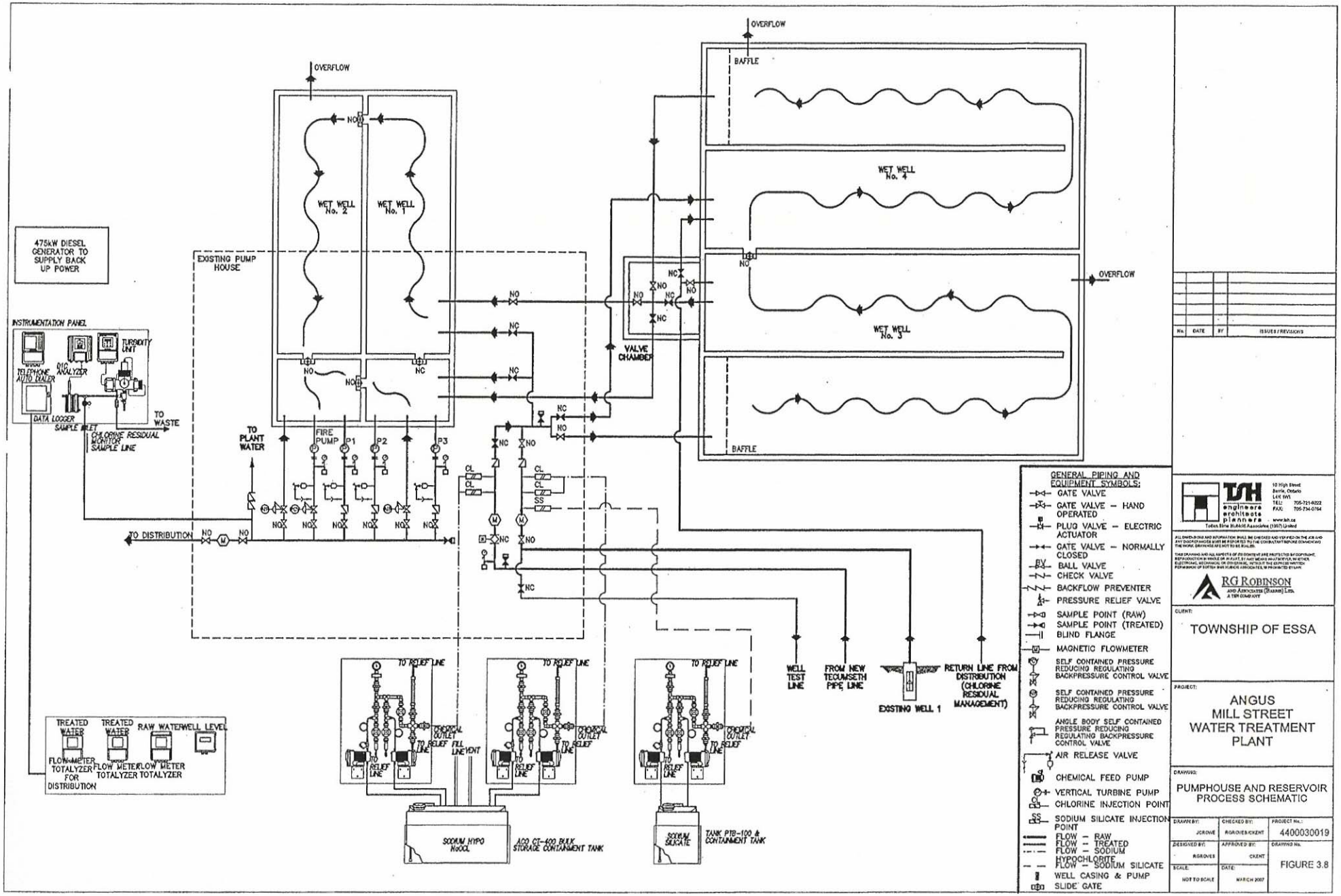

No.	DATE	BY	ISSUES / REVISIONS

TSH engineers architects planners
10 High Street, Barrie, Ontario, L4N 1W1
TEL: 705-721-8022
FAX: 705-734-0764
www.tsh.ca
Tatham Stine Hulcroft Associates (1997) Limited

ALL DIMENSIONS AND INFORMATION SHALL BE CHECKED AND VERIFIED ON THE JOB AND ANY DISCREPANCIES SHALL BE REPORTED TO THE CONSULTANT BEFORE COMMENCING THE WORK. DRAWINGS ARE NOT TO BE SCALED.

THIS DRAWING AND ALL ASPECTS OF ITS CONTENT ARE PROTECTED BY COPYRIGHT. REPRODUCTION IN WHOLE OR IN PART, BY ANY MEANS WHATSOEVER, IN EITHER ELECTRONIC, MECHANICAL OR HYDROCOPIAL, WITHOUT THE EXPRESS WRITTEN PERMISSION OF TATHAM STINE HULCROFT ASSOCIATES, IS PROHIBITED BY LAW.

RG ROBINSON AND ASSOCIATES (BARRIE) LTD. A TSH COMPANY

CLIENT:
TOWNSHIP OF ESSA

PROJECT:
ANGUS
MILL STREET
WATER TREATMENT
PLANT

DRAWING:
PUMPHOUSE AND RESERVOIR
PROCESS SCHEMATIC

DRAWN BY:	CHECKED BY:	PROJECT No.:
JCROWE	RGROVES/CKENT	4400030019
DESIGNED BY:	APPROVED BY:	DRAWING No.
RGROVES	CKENT	FIGURE 3.8
SCALE: NOT TO SCALE	DATE: MARCH 2007	

K:\00030019\00003 Phase\Operations Manual\Figures\Figure 3.8.dwg, Figure 3.8, 4/5/2007 2:58:01 PM, cdarby

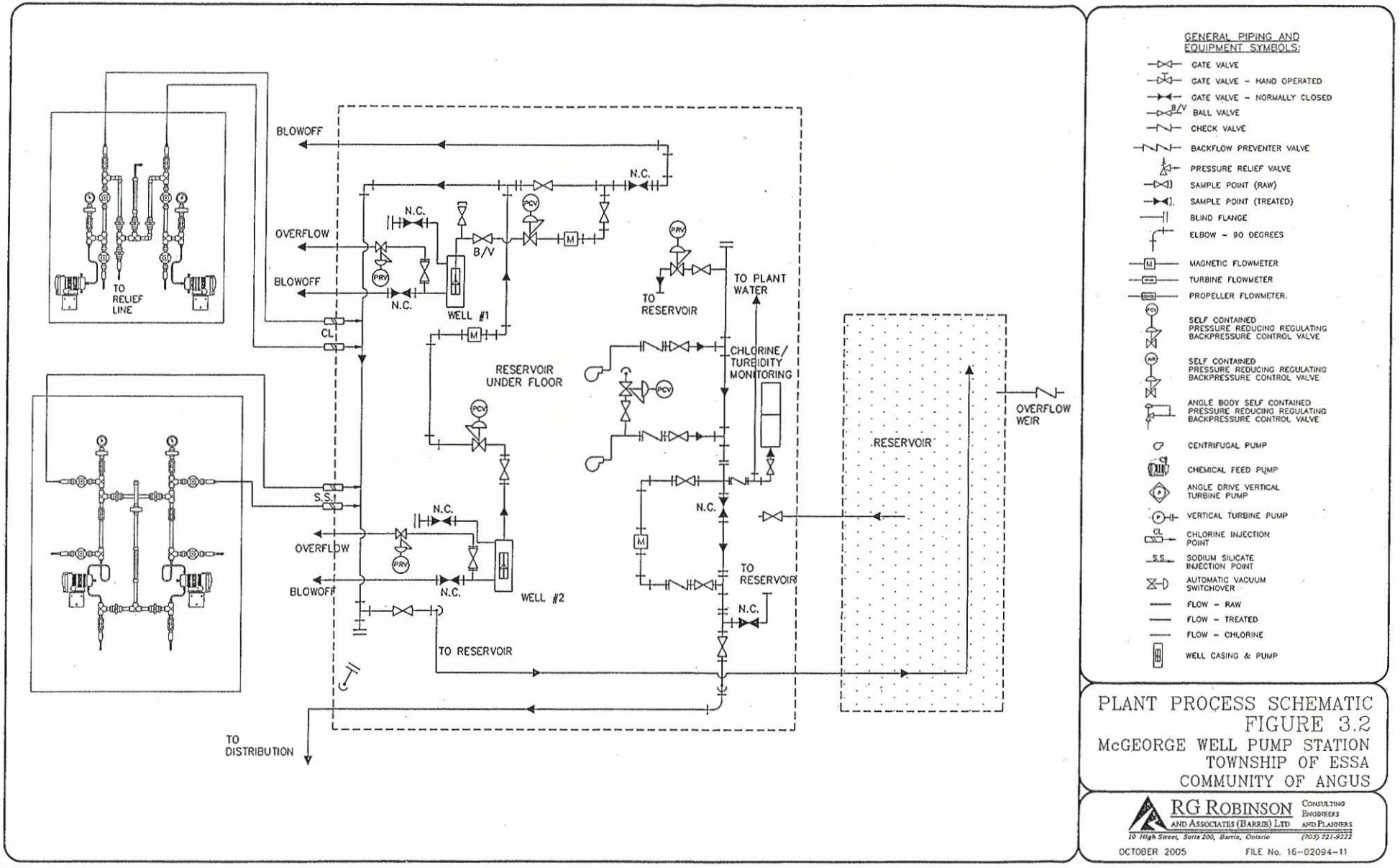

GENERAL PIPING AND EQUIPMENT SYMBOLS:

- GATE VALVE
- GATE VALVE - HAND OPERATED
- GATE VALVE - NORMALLY CLOSED
- BALL VALVE
- CHECK VALVE
- BACKFLOW PREVENTER VALVE
- PRESSURE RELIEF VALVE
- SAMPLE POINT (RAW)
- SAMPLE POINT (TREATED)
- BLIND FLANGE
- ELBOW - 90 DEGREES
- MAGNETIC FLOWMETER
- TURBINE FLOWMETER
- PROPELLER FLOWMETER
- SELF CONTAINED PRESSURE REDUCING REGULATING BACKPRESSURE CONTROL VALVE
- SELF CONTAINED PRESSURE REDUCING REGULATING BACKPRESSURE CONTROL VALVE
- ANGLE BODY SELF CONTAINED PRESSURE REDUCING REGULATING BACKPRESSURE CONTROL VALVE
- CENTRIFUGAL PUMP
- CHEMICAL FEED PUMP
- ANGLE DRIVE VERTICAL TURBINE PUMP
- VERTICAL TURBINE PUMP
- CHLORINE INJECTION POINT
- SODIUM SILICATE INJECTION POINT
- AUTOMATIC VACUUM SWITCHOVER
- FLOW - RAW
- FLOW - TREATED
- FLOW - CHLORINE
- WELL CASING & PUMP

PLANT PROCESS SCHEMATIC
FIGURE 3.2
McGEORGE WELL PUMP STATION
TOWNSHIP OF ESSA
COMMUNITY OF ANGUS

RG ROBINSON AND ASSOCIATES (BARRIE) LTD
CONSULTING ENGINEERS AND PLANNERS
10 High Street, Suite 200, Barrie, Ontario (705) 721-9222

OCTOBER 2005 FILE No. 16-02094-11

K:\02094-11\McGeorge\SECTIONS\fig 3-2.dwg, FIG3.2, 4/11/2006 8:47:35 AM, mbatterink

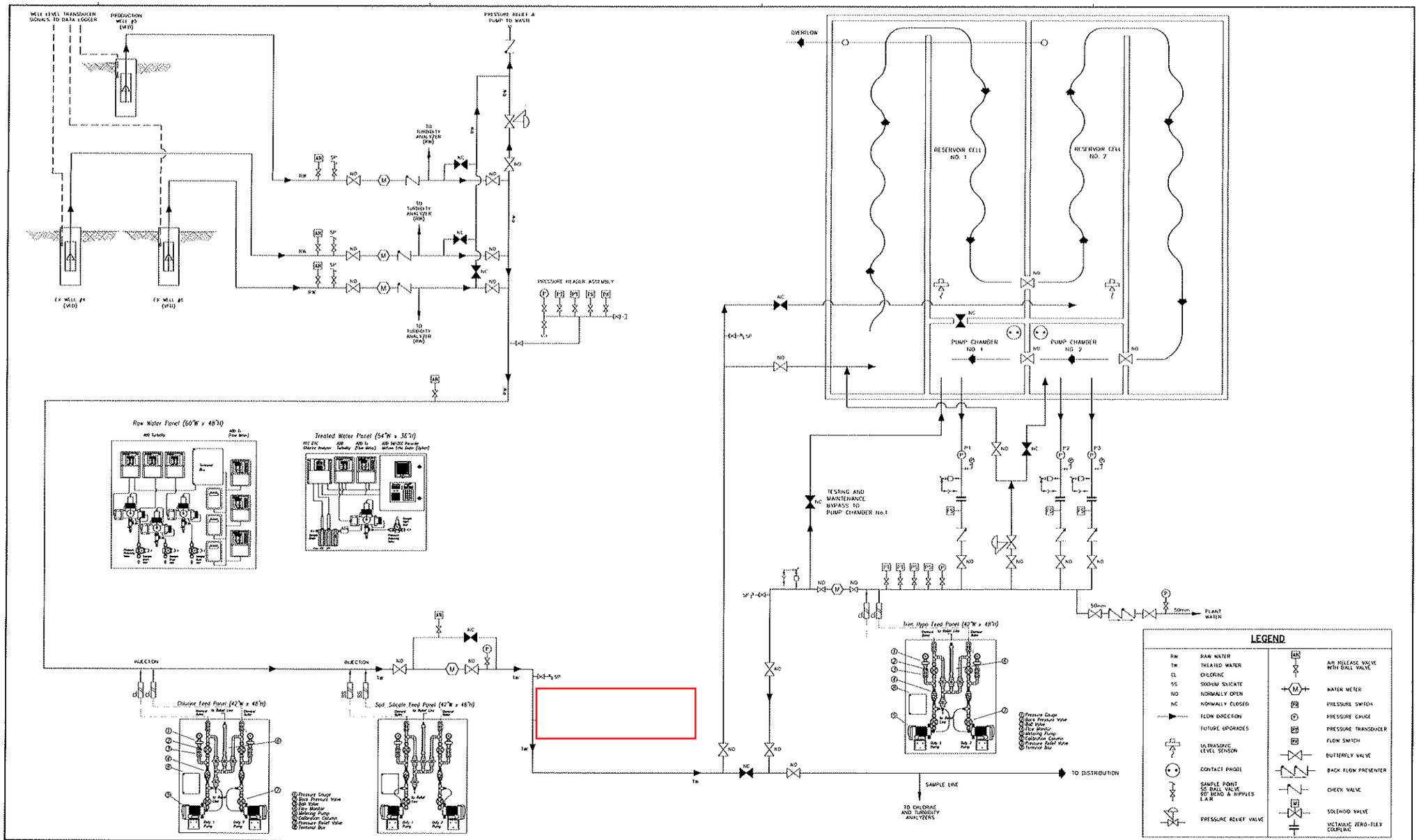

AECOM

AECOM Canada Ltd.
10 Chackley Street, Sarnia, Ontario, Canada L4N 1W1
T705.731.9222 F705.734.0784

No.	DATE	BY	ISSUES / REVISIONS
3	08/26/2010	RFG	OPERATIONS MANUAL
2	08/13/2010	RFG	ISSUED FOR CONSTRUCTION
1	07/16/2010	RFG	ISSUED FOR MOE APPROVAL

CLIENT

DRAWN BY: EL	CHECKED BY: RFG	PROJECT	ANGUS - BROWNLEY WELL SITE, PUMPHOUSE AND RESERVOIR PHASE II
DESIGNED BY: RFG	APPROVED BY: GH	DRAWING	PROCESS SCHEMATIC
SCALE: N.T.S.	DATE: SEPT 2010		

PROJECT No.: 111466

DRAWING No.: PR1

Drinking Water System Overview

The Baxter Distribution System is owned by the Township of Essa and operated by the Ontario Clean Water Agency (OCWA). The Baxter Distribution system is classified as a stand-alone Small Municipal Residential Drinking Water System servicing an approximate population of 340 persons (based on 2021 Canada Census Data) in the Hamlet of Baxter, Township of Essa.

On November 21, 2017 the drinking water system became a stand-alone distribution system, receiving treated water from the Raymond A. Barker Ultrafiltration Plant owned and operated by the Town of Collingwood via a Regional water transmission main (pipeline) that stretches from the Town of Collingwood to Alliston, in the Township of New Tecumseth. The Township of Essa has a sub-agreement with the Town of New Tecumseth to receive 400 m^3/day from the pipeline.

Source Water

General Characteristics
The Raymond A. Barker Water Treatment Plant (RAB) is an ultrafiltration membrane surface water treatment plant, located in the Town of Collingwood. Surface water is drawn from the Nottawasaga Bay through a submerged inlet structure, treated and the finished water is supplied to the Town of Collingwood and the Town of the Blue Mountains, or into the Regional Pipeline, which supplies water to the Town of Collingwood and the Town of New Tecumseth. The Township of Essa has an agreement with the Town of New Tecumseth to take 400m^3/day of water from the Regional Pipeline to supply safe drinking water to the Baxter facility.

Common Fluctuations
Any common fluctuations would be listed in the Annual Reports completed by the Town of Collingwood.

Threats
Any threats would be listed in the Annual Reports completed by the Town of Collingwood.

Operational Challenges
There appears to be no significant operational challenges with respect to the re-chlorinating and distributing of the Regional Pipeline water to the Baxter Distribution System.

Treatment System Description

Baxter Distribution System receives water from the Collingwood (Raymond A. Barker Ultrafiltration Plant) Water Treatment Plant via the Collingwood to Alliston regional pipeline, which is also known as the New Tecumseth pipeline. The Corporation of the Town of Collingwood owns and operates the Collingwood Drinking Water system, which supplies treated drinking water to the Town of Collingwood and the Town of the Blue Mountains, or into the Regional Pipeline, which then supplies water to the Town of Collingwood and the Town of New Tecumseth. The Township of Essa has a subcontract with the Town of New Tecumseth, which allows for the Baxter Distribution System to take up to 400 m^3/day of water from the Regional pipeline. The water towers at Baxter DS will take water, up to 400 m^3/day, until full and if 400 m^3 is not needed,

then the remaining balance of water flows is sent to the Angus DWS into the Mill Street Water Treatment Plant reservoir. If the pipeline is shut down for maintenance then Baxter cannot receive water. When the pipeline is not being used, the Operating Authority has potable water transported in with trucks, from another water supply system.

In December 2023, a new Booster Pumping Station with Re-Chlorination was commissioned within the Hamlet of Baxter. The plant is located at 108 Murphy's Road, Baxter, Ontario and consists of:

Water Storage Tanks
Two (2) on-site above ground water storage tanks. Each tank is approximately 9 m in diameter and 7.5 m high, with a usable volume of 496 m^3, and is equipped with two level transmitters, one on each tank.

Booster Pumping Station
Approximately 18.8 m long and 8.8 m wide with the following equipment: Three (3) high lift distribution pumps with VFD (one duty and one standby), One flowmeter on the water incoming line, one flowmeter on the water discharge line, two pressure transducers on the water discharge line, two motorized modulating valves on the water incoming line, and SCADA system. The Booster Pumping Station also contains a chlorine storage room with one day tank and spill containment, which feeds sodium hypochlorite as needed via two chemical metering pumps (one duty, and one stand-by) to the injection point to the incoming water line and two chemical metering pumps (one duty, and one stand-by) to the injection point at the water discharge line. Two chlorine residual analyzers are installed to measure free chlorine residual concentration on the incoming water line and one on the discharge water line.

Fire Truck Filling Station
A "dry hydrant" is provided for fire truck filling or for filling the storage tank (hauled water) if the pipeline was down for maintenance and unavailable.

Alarming of the System
The system is alarmed for numerous parameters and monitored by Huronia Alarms in Midland, Ontario.

Standby Power
Equipped with a 200 kW diesel generator, with a 1500L fuel tank with secondary containment, and auto switch over to provide standby power in the event of a power failure.

Treatment System Process Flow Chart

Refer to the next page for the Process Flow Diagrams for the Baxter Distribution System.

Description of the Distribution System Components

The Baxter Distribution System is classified as a Class II Water Distribution System and is connected to the Collingwood-to-Alliston Regional pipeline with approximately 107 meters of 150

mm diameter Poly Vinyl Chloride (PVC) pipe, then 1300 meters of 250 mm diameter High Density Poly Ethylene (HDPE) pipe, and then 255 meters of 150 mm diameter HDPE pipe. There are approximately 55 service connections within the Baxter Distribution System.

Revision History

Date	Revision #	Reason for Revision
2018-08-31	0	Procedure issued – Information within OP-06B was originally set out in the Main body and tabs of OCWA's Operational Plan (last revision 0 dated 2016-06-20). Separated the DWS descriptions from the body of this procedure into Appendices. Changed order of system description to follow the process (e.g., source water first, then treatment, then distribution). And completed sections: source water, treatment system description, treatment system process flow chart, and description of distribution system components.
2019-03-13	1	Updated to include the applicable data logger information and number of service connections within the "Description of the Distribution System Components" section and minor grammar edits throughout.
2022-01-10	2	Updated the description of where data logger information is downloaded and stored. Removed reference to "periodically" as per internal audit recommendation.
2024-01-15	3	Updated the drinking water system overview to provided clarification on the Owner/Operator of the New Tecumseth Pipeline as per External Audit recommendation. Updated the entire Treatment System Description to reflect the Newly Commissioned Booster Pumping Station with Re-Chlorination Facility. Inserted new Process Flow Diagram.
2025-03-12	4	Updated references agreement to take 100 m^3/day to 400 m^3/day as both Townships have agreed on increased takings to accommodate growth in the Hamlet of Baxter.

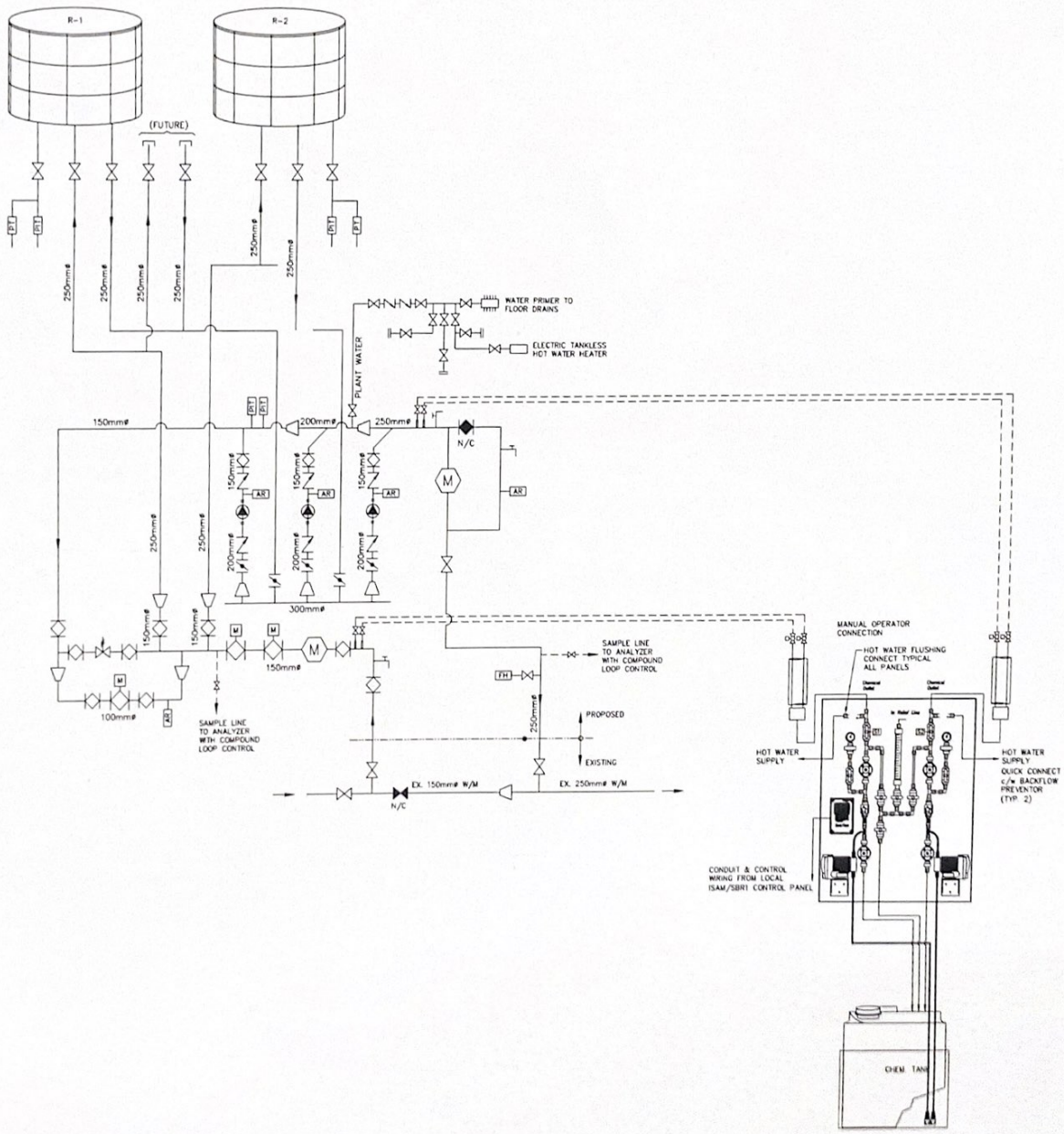

LEGEND

- PROCESS PIPE
- M — MAG METER
- PUMP
- PLUG VALVE (NORMALLY OPEN)
- PLUG VALVE (NORMALLY CLOSED)
- PLUG VALVE W/ ACTUATOR
- BALL VALVE
- GATE VALVE
- BUTTERFLY VALVE
- CHECK VALVE
- OR — PRESSURE RELIEF VALVE
- PRESSURE GAUGE
- BACK PRESSURE CONTROL VALVE
- REDUCER
- NORMALLY CLOSED (SOLID FILL)
- SOLENOID VALVE ELECTRIC ACTUATED
- M — MOTORIZED VALVE
- BACKFLOW PREVENTER VALVE
- SAMPLE POINT
- AR — AIR RELEASE VALVE
- FH — FIRE HYDRANT
- PIT — PRESSURE TRANSMITTER
- PT — PRESSURE TRANSMITTER
- HOSE BIBB

Drinking Water System Overview

The Thornton (Glen Avenue) Drinking Water System is owned by the Township of Essa and operated by the Ontario Clean Water Agency (OCWA). The Thornton Drinking Water System is classified as a Large Municipal Drinking Water System, with 519 service connections and an approximate population of 1,550 persons. The system is comprised of one pumphouse, which draws water from four municipal groundwater production wells, which lies at depth and appears to be well protected from surficial activities. This assumption is supported by microbiological and turbidity results for 2022 to 2023 which indicate good water quality.

Source Water

General Characteristics

The raw water source for the Thornton (Glen Avenue) treatment plant is four (4) drilled ground water wells with two (2) wells located adjacent to the pumphouse and the other two (2) wells located north of the pumphouse in the Thornton Creek Estate subdivision. Bacteriological analysis of the raw water indicates a source of very good quality and not under the direct influence of surface water. In 2004, the Township of Essa participated in the South Simcoe Regional Groundwater Studies conducted in part by the Nottawasaga Valley Conservation Authority, Golder Associates and the Ministry of the Environment to identify recharge areas, capture zones, well head protection areas and potential contamination areas to groundwater resources.

Raw Water Characteristics (based on 2022 and 2023 data)

Location	**Number of Samples**	**Range of *E. Coli* Results** (CFU/100mL)		**Range of Total Coliform Results**		**Range of Turbidity Results** (NTU)	
		Min.	Max.	Min.	Max.	Min.	Max.
RW, Well #1	104	0	0	0	73	0.07	0.95
RW, Well #2	104	0	0	0	0	0.20	0.86
RW, Well #3	104	0	0	0	2	0.08	0.90
RW, Well #4	104	0	0	0	4	0.14	0.89

Common Fluctuations

There appears to be no common fluctuations within the Thornton Well Supply System.

Threats

All four (4) wells dedicated for the Thornton (Glen Avenue) Well Supply System extract water from a deep aquifer system. The capture zones for the Glen Avenue wells tend to lie southeast of the community of Thornton. The capture zones for the two wells located in Thornton Creek Estates extend in a northeast direction towards Highway 400. The accumulation of fine-grained overburden affords good protection to the underlying aquifers. Despite the thickness of the overburden material, protection measures should be implemented within the wellhead protection area (WHPA) to ensure that the aquifer is not compromised. Care should be taken to prevent surface contaminants from contaminating the production aquifer. The primary concern for this

aquifer is the potential for contaminants to rapidly move through improperly sealed and abandoned boreholes and wells. The land use in the immediate vicinity of the wells is residential and open space. Most of the land use within the WHPA is agricultural. There are no industrial, commercial land uses in the WHPA.

Operational Challenges
There appears to be no significant operational challenges with respect to the source water for the Thornton Well Supply System.

Treatment System Description

The Thornton Drinking Water System pumphouse is located on Glen Avenue in the Hamlet of Thornton, Township of Essa. Raw water is supplied to the pumphouse by means of four (4) drilled wells each equipped with submersible well pumps. Wells 1 and 2 are comprised of 150 mm diameter casings, extending to depths of 50 and 52 meters respectively. Wells 1 and 2 are located adjacent to the pump house each with a maximum pumping rate of 6.06 L/sec at a TDH of 73 m. Wells 3 and 4 are located in the Thornton Creek Estate subdivision North of the Glen Avenue pumphouse. Well #3 is comprised of a 300mm diameter casing extending to a depth of 32 meters, capable of pumping 5.7 L/sec at a TDH of 60m. Well #4 is comprised of a 160mm diameter casing extending to a depth of 31.4 meters, capable of pumping 3.8 L/sec at a TDH of 73m. Controls for wells #3 and #4 are located in an adjacent pre-fabricated vinyl building.

Primary Disinfection
As raw water flows from the wells into the Glen Avenue Pumphouse, pumps are automatically activated to treat the water with NSF certified sodium silicate (for iron sequestration) which is injected into the raw water discharger header. The sodium silicate system has two metering pumps (one duty and one standby) complete with automatic switch over and closed top storage tank with spill containment. Water is then injected from the main header by one of two (2) chemical feed pumps, each capable of pumping 2.5 L/hr with sodium hypochlorite (for primary and secondary disinfection). The Sodium Hypochlorite is stored in two (2) bulk day tanks, each with 500 L storage with one (1) chlorine pump dedicated to each bulk day tank.

Storage and Distribution
Treated water is pumped to two (2) fused glass lined bolted steel above ground storage tanks, each with a capacity of 710 cubic meters. Water is pumped from the storage tanks to the distribution system by four (4) variable frequency drive high lift pumps, each with a rated pumping capacity of 26.52 L/sec.

Monitoring and Recording
Online analyzers monitor treated water for free chlorine residual. Operational data, including pump run hours, flow rates; free chlorine residual is recorded on data logger systems, one located on the MCC panel and the other mounted on the wall. The logged data is downloaded and stored on the main server at the Ontario Clean Water Agency office at Angus Water Pollution Control Plant (WPCP). The system is alarmed for numerous parameters and monitored continuously by Huronia Alarms in Midland, Ontario.

Auxiliary Power
The Glen Avenue pumphouse is equipped with a 175 kW diesel generator with automatic switch over. This supplies power to the plant in the event of a power failure.

Treatment System Process Flow Chart

Refer to the next page for the Process Flow Diagram of the Thornton Well Supply System.

Description of the Distribution System Components

The Thornton Well Supply System is classified as a Class II Water Distribution and Supply System. The distribution system components consist of approximately 519 service connections and 38 hydrants. There are two (2) fused glass lined, bolted steel, above ground standpipes each with storage capacities of 710 cubic meters. One standpipe, 710 m^3, is located on the north side of County Road No 21 at William Street with approximately 384 m of dedicated (no connections) 150 mm diameter inlet piping and 300 mm diameter outlet piping extending along County Road No 21 between the standpipe and the well pumphouse. The second standpipe, 710 m^3, is located approximately 5 m west offset from the standpipe described above, complete with yard pipe modifications and control valves.

Revision History

Date	Revision #	Reason for Revision
2018-08-31	0	Procedure issued – Information within OP-06C was originally set out in the Main body and tabs of OCWA's Operational Plan (last revision 0 dated 2016-06-20). Separated the DWS descriptions from the body of this procedure into Appendices. Changed order of system description to follow the process (e.g., source water first, then treatment, then distribution). Completed all sections: source water, treatment system description, treatment system process flow chart, and description of distribution system components.
2019-03-13	1	Updated to reflect the latest number of service connections. Added new (fourth) high lift pump and second data logger system (Red Lion). Specified "primary" disinfection via sodium hypochlorite.
2022-01-10	2	Updated to reflect the latest number of service connections and population. Removed reference to term "periodically" for when logged data is downloaded and stored on the main server as per internal audit recommendation.
2022-03-31	3	Updated to reflect the removal of the turbidity analyzer, the increase in standpipe storage capacity to 710m3, and the addition of two tanks for sodium hypochlorite solution, all per the amendment to the DWWP.
2024-01-16	4	Updated system description to reflect correct population numbers and service connections. Added in a Raw Water Characteristics table (2022 to 2023) data to represent the raw water information for the system. General formatting and informational updated to the System Description to include Owner and Operator information.

Date	Revision #	Reason for Revision
2025-01-16	5	Updated system description to include Schedule C DWWP amendment for the use of Sodium Silicate (for iron sequestration) to the treatment process. Removed watermark.
2025-03-12	6	Updated the Thornton process flow diagram to include Sodium Silicate.

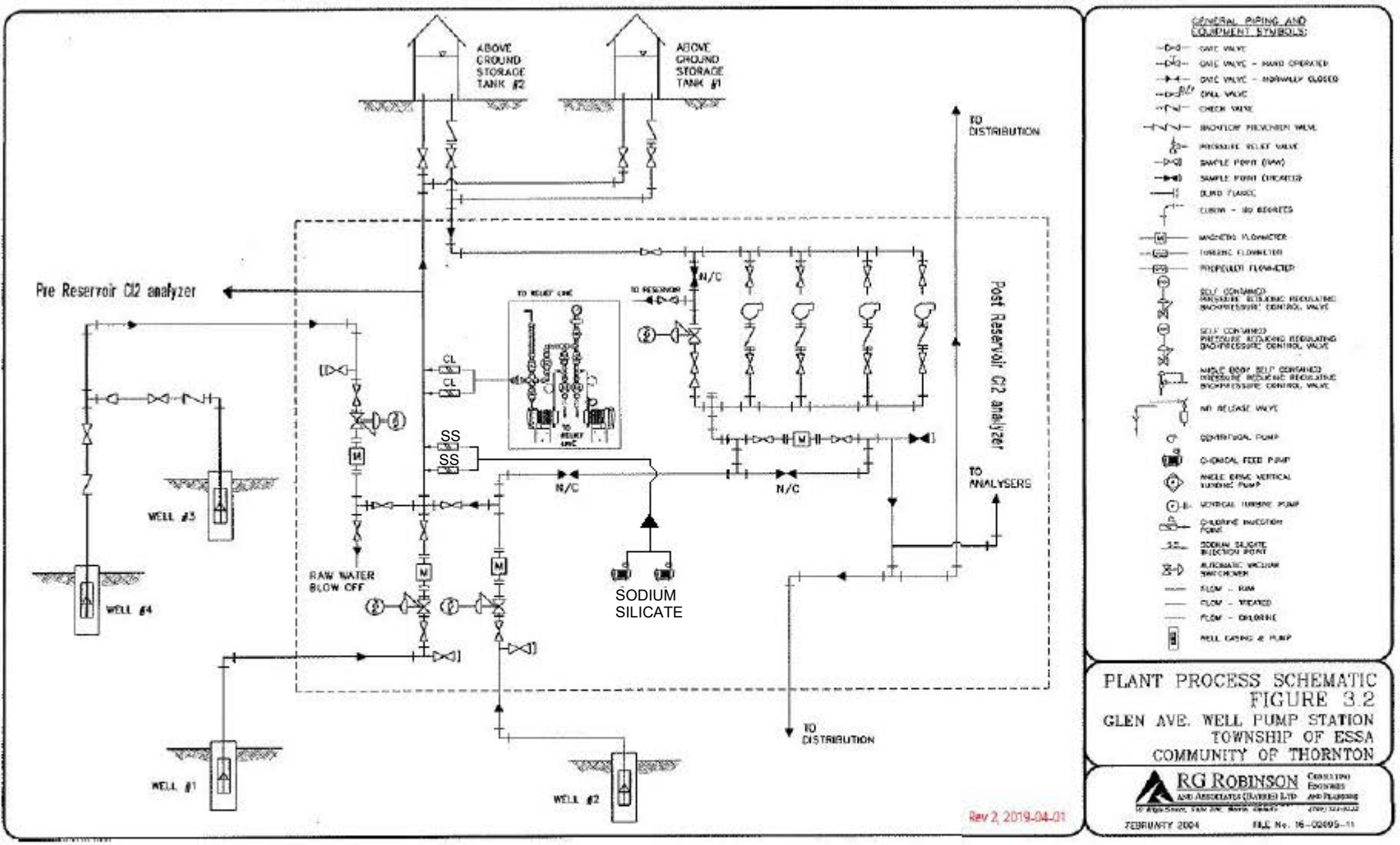

GENERAL PIPING AND EQUIPMENT SYMBOLS:

- GATE VALVE
- GATE VALVE - HAND OPERATED
- GATE VALVE - NORMALLY CLOSED
- BALL VALVE
- CHECK VALVE
- BACKFLOW PREVENTER VALVE
- PRESSURE RELIEF VALVE
- SAMPLE POINT (RAW)
- SAMPLE POINT (TREATED)
- BLIND FLANGE
- ELBOW - 90 DEGREES
- MAGNETIC FLOWMETER
- TURBINE FLOWMETER
- PROPELLER FLOWMETER
- SELF CONTAINED PRESSURE REDUCING REGULATING BACKPRESSURE CONTROL VALVE
- SELF CONTAINED PRESSURE REDUCING REGULATING BACKPRESSURE CONTROL VALVE
- ANGLE BODY SELF CONTAINED PRESSURE REDUCING REGULATING BACKPRESSURE CONTROL VALVE
- AIR RELEASE VALVE
- CENTRIFUGAL PUMP
- CHEMICAL FEED PUMP
- ANGLE DRIVE VERTICAL TURBINE PUMP
- VERTICAL TURBINE PUMP
- CHLORINE INJECTION POINT
- SODIUM SILICATE INJECTION POINT
- AUTOMATIC VACUUM RELIEF VALVE
- FLOW - RAW
- FLOW - TREATED
- FLOW - CHLORINE
- WELL CASING & PUMP

PLANT PROCESS SCHEMATIC
FIGURE 3.2
GLEN AVE. WELL PUMP STATION
TOWNSHIP OF ESSA
COMMUNITY OF THORNTON

RG ROBINSON AND ASSOCIATES (BARRIE) LTD. CONSULTING ENGINEERS AND PLANNERS

FEBRUARY 2004 FILE No. 16-02095-11

1. Purpose

To document the process for conducting a risk assessment to identify and assess potential hazardous events and associated hazards that could affect drinking water safety.

2. Definitions

Consequence – the potential impact to public health and/or operation of the drinking water system if a hazard/hazardous event is not controlled

Control Measure – includes any processes, physical steps or other practices that have been put in place at a drinking water system to prevent or reduce a hazard before it occurs

Critical Control Point (CCP) – An essential step or point in the subject system at which control can be applied by the Operating Authority to prevent or eliminate a drinking water health hazard or reduce it to an acceptable level

Drinking Water Health Hazard – means, in respect of a drinking water system,

a) a condition of the system or a condition associated with the system's waters, including any thing found in the waters,
    i. that adversely affects, or is likely to adversely affect, the health of the users of the system,
    ii. that deters or hinders, or is likely to deter or hinder, the prevention or suppression of disease, or
    iii. that endangers or is likely to endanger public health,
b) a prescribed condition of the drinking water system, or
c) a prescribed condition associated with the system's waters or the presence of a prescribed thing in the waters

Hazardous Event – an incident or situation that can lead to the presence of a hazard

Hazard – a biological, chemical, physical or radiological agent that has the potential to cause harm

Likelihood – the probability of a hazard or hazardous event occurring

3. Procedure

3.1 Operations Management ensures that operations personnel are assigned to conduct a risk assessment at least once every thirty-six months. At a minimum, the Risk Assessment Team must include the QEMS Representative, at least one Operator for the system and at least one member of Operations Management.

3.2 The QEMS Representative is responsible for coordinating the risk assessment and ensuring that documents and records related to the risk assessment activities are maintained.

3.3 The Risk Assessment Team performs the risk assessment as follows:

3.3.1 OP-07 Risk Assessment and OP-08 Risk Assessment Outcomes are reviewed.

3.3.2 For each of the system's activities/process steps, potential hazardous events and associated hazards (possible outcomes) that could impact the system's ability to deliver safe drinking water are identified. At a minimum, potential hazardous events and associated hazard as identified in the most current version of the Ministry document titled "Potential Hazardous Events for Municipal Residential Drinking Water Systems" (as applicable to the system type) must be considered.

3.3.3 For each of the hazardous events, control measures currently in place at the system to eliminate the hazard or prevent it from becoming a threat to public health are specified. Control measures may include alarms, monitoring procedures, SOPs/contingency plans, preventive maintenance activities, backup equipment, engineering controls, etc.

3.3.4 To ensure that potential drinking water health hazards are addressed and minimum treatment requirements as regulated by SDWA O. Reg. 170/03 and the Ministry's "Procedure for Disinfection of Drinking Water in Ontario" (as amended) are met, OCWA has established mandatory Critical Control Points (CCPs).

<u>As a minimum, the following must be included as CCPs (as applicable):</u>

- Equipment or processes required to achieve primary disinfection (e.g., chemical and/or UV disinfection system, coagulant dosing system, filters, etc.)
- Equipment or processes necessary for maintaining secondary disinfection in the distribution system
- Fluoridation system

3.3.5 Additional CCPs for the system are determined by evaluating and ranking the hazardous events for the remaining activities/process steps (i.e., those <u>not</u> included as OCWA's minimum CCPs).

3.3.6 Taking into consideration existing control measures (including the reliability and redundancy of equipment), each hazardous event is assigned a value for the likelihood and a value for the consequence of that event occurring based on the following criteria:

Value	Likelihood of Hazardous Event Occurring
1	**Rare** – Estimated to occur every 50 years or more (usually no documented occurrence at site)
2	**Unlikely** – Estimated to occur in the range of 10 – 49 years

Value	Likelihood of Hazardous Event Occurring
3	**Possible** – Estimated to occur in the range of 1 – 9 years
4	**Likely** – Occurs monthly to annually
5	**Certain** – Occurs monthly or more frequently

Value	Consequence of Hazardous Event Occurring
1	**Insignificant** – Little or no disruption to normal operations, no impact on public health
2	**Minor** – Significant modification to normal operations but manageable, no impact on public health
3	**Moderate** – Potentially reportable, corrective action required, potential public health impact, disruption to operations is manageable
4	**Major** – Reportable, system significantly compromised and abnormal operations if at all, high level of monitoring and corrective action required, threat to public health
5	**Catastrophic** – Complete failure of system, water unsuitable for consumption

The likelihood and consequence values are multiplied to determine the risk value (ranking) of each hazardous event. Hazardous events with a ranking of 12 or greater are considered high risk.

3.3.7 Hazardous events and rankings are reviewed and any activity/process step is identified as an additional CCP if <u>all</u> of the following criteria are met:

- ✓ The associated hazardous event has a ranking of 12 or greater;
- ✓ The associated hazardous event can be controlled through control measure(s);
- ✓ Operation of the control measures can be monitored and corrective actions can be applied in a timely fashion;
- ✓ Specific control limits can be established for the control measure(s); and
- ✓ Failure of the control measures would lead to immediate notification of Medical Officer of Health (MOH) or Ministry or both.

3.4 The outcomes of the risk assessment are documented as per OP-08 Risk Assessment Outcomes.

3.5 At least once every calendar year, the QEMS Representative facilitates the verification of the currency of the information and the validity of the assumptions used in the risk assessment in preparation for the Management Review (OP-20). When performing this review, the following may be considered:

- Process/equipment changes
- Reliability and redundancy of equipment

- Emergency situations/service interruptions
- CCP deviations
- Audit/inspection results
- Changes to the Ministry document "Potential Hazardous Events for Municipal Residential Drinking Water Systems" (as amended)

4. Related Documents

OP-08 Risk Assessment Outcomes
OP-20 Management Review
Ministry's "Potential Hazardous Events for Municipal Residential Drinking Water Systems" (as amended)
Ministry's "Procedure for Disinfection of Drinking Water in Ontario" (as amended)

5. Revision History

Date	Revision #	Reason for Revision
2018-08-31	0	Procedure issued – Information within OP-07 was originally set out in the QEMS Procedure QP-02 Risk Assessment and Risk Assessment Outcomes (last revision 0 dated 2016-06-20). Revised Purpose to reflect element 7 requirements only. Included minimum requirements for the Risk Assessment Team (QEMS Representative, at least one operator for the system and at least one member of Operation Management). Clarified role of QEMS Representative in coordinating the risk assessment and maintaining documents and records. Re-worded procedure for performing the risk assessment (process itself remains essentially unchanged). Included reference to MECP's "Potential Hazardous Events for Municipal Residential Drinking Water Systems". Removed requirements for documenting the outcomes of the risk assessment (now covered in OP-08). Changed annual review to at least once every calendar year and included potential considerations when performing the review.
2024-08-22	1	Procedure updated (E.g., Reason for Revision - Replaced MOECC with Ministry (Ministry refers to the Ontario government ministry responsible for drinking water and environmental legislation); Added "(as amended)" directly following any references to Ministry documents to point to the most current version of the document and added the Ministry document "Potential Hazardous Events for Municipal Residential Drinking Water Systems" (as amended) to the list of items that may be considered when performing the annual verification of the currency of the information in the risk assessment)]. Removed water mark.

1. Purpose

To document the outcomes of the risk assessment conducted as per OP-07 Risk Assessment.

2. Definitions

Critical Control Point (CCP) – An essential step or point in the subject system at which control can be applied by the Operating Authority to prevent or eliminate a drinking water health hazard or reduce it to an acceptable level

Critical Control Limit (CCL) – The point at which a Critical Control Point response procedure is initiated

3. Procedure

3.1 The QEMS Representative is responsible for updating the information in OP-08A to OP-08C "Summary of Risk Assessment Outcomes," as required. Where:

- OP-08A is Angus Well Supply System;
- OP-08B is Baxter Distribution System;
- OP-08C is Thornton Well Supply System;

3.2 The results of the risk assessment conducted as per OP-07 are documented in Table 1 of OP-08A to OP-08C, inclusive. This includes:

- Identified potential hazardous events and associated hazards (possible outcomes) for each of the system's activities/process steps;
  Note: Hazards listed in the Ministry's "Potential Hazardous Events for Municipal Residential Drinking Water Systems" (as amended) are included in Table 1 of OP-08A to OP-08C, inclusive. Repeat Hazardous Events are referenced accordingly;
- Identified control measures to address the potential hazards and hazardous events; and
- Assigned rankings for the hazardous events (likelihood x consequence = risk value) and whether the hazardous event is a Critical Control Point (CCP) (mandatory or additional).
  Note: If the hazardous event is ranked as 12 or higher and it is <u>not</u> being identified as a CCP, provide rationale as to why it does not meet the criteria set out in section 3.3.7 of OP-07).

3.3 Operations Management is responsible for ensuring that for each CCP:

- Critical Control Limits (CCLs) are set;
- Procedures and processes to monitor the CCLs are established; and
- Procedures to respond to, report and record deviations from the CCLs are implemented.

The identified CCPs, their respective CCLs and associated procedures are documented in Table 2 of OP-08A to OP-08C, inclusive.

3.4 A summary of the results of the annual review/36-month risk assessment is recorded in Table 3 of OP-08A to OP-08C, inclusive.

3.5 Operations Management considers the risk assessment outcomes during the review of the adequacy of the infrastructure (refer to OP-14 Review and Provision of Infrastructure).

4. Related Documents

OP-07 Risk Assessment
OP-08A to OP-08C Summary of Risk Assessment Outcomes
OP-14 Review and Provision of Infrastructure
Ministry's "Potential Hazardous Events for Municipal Residential Drinking Water Systems" (as amended)

5. Revision History

Date	Revision #	Reason for Revision
2018-08-31	0	Procedure issued – Information within OP-08 was originally set out in the Main body of OCWA's Operational Plan (last revision 0 dated 2016-06-20). Included a separate Appendix for each Drinking Water System and summarized their reference page. Clarified role of QEMS Representative in updating the information in OP-08A to OP-08C, inclusive, Summary of Risk Assessment Outcomes. Included requirements for how to document the risk assessment outcomes using the tables in OP-08A to OP-08C, inclusive. Clarified responsibility of Operations Management to ensure Critical Control Limits are set and related procedures are developed. Included reference to OP-14 Review and Provision of Infrastructure to emphasize the need for Operations Management to review the risk assessment outcomes during the infrastructure review.
2024-12-18	1	Procedure updated. Replaced MECP with Ministry. Added "(as amended)" directly following references to the Ministry's "Potential Hazardous Events for Municipal Residential Drinking Water Systems" to point to the most current version of the document. Updated related documents.

ORGANIZATIONAL STRUCTURE, ROLES, RESPONSIBILITIES AND AUTHORITIES

1. Purpose

To document the following for the Township of Essa Drinking Water Systems:

- Owner;
- Organizational structure of the Operating Authority;
- QEMS roles, responsibilities and authorities of staff, Top Management and individuals/groups that provide corporate oversight; and
- Responsibilities for conducting the Management Review

2. Definitions

Operations Management – refers to the General Manager, Senior Operations Manager and/or Operations Manager that directly oversees a facility's operations

Senior Leadership Team (SLT) – members include President and CEO, Executive Vice President and General Counsel, Vice Presidents of OCWA's business units and Regional Hub Managers

Top Management – a person, persons or a group of people at the highest management level within an operating authority that makes decisions respecting the QMS and recommendations to the owner respecting the subject system or subject systems

Operations Personnel – Employees of the drinking water system who perform various activities related to the compliance, operations and maintenance of the drinking water system that may directly affect drinking water quality

3. Procedure

3.1 Organizational Structure

The Township of Essa Drinking Water Systems are owned by the Corporation of the Township of Essa and is represented by the Manager of Public Works and the Chief Administrative Officer.

The organizational structure of OCWA, the Operating Authority, is outlined in appendix OP-09A: Organizational Structure.

3.2 Top Management

Top Management for the Township of Essa Drinking Water Systems consists of:

- Operations Management – South Simcoe Hub
- Regional Hub Manager – Georgian Highlands Region
- Safety, Process & Compliance Manager – Georgian Highlands Region

Irrespective of other duties (see Table 9-2 below), Top Management's responsibilities and authorities include:

- Endorsing the Operational Plan as per the Commitment and Endorsement procedure (OP-03);
- Ensuring that the QEMS meets the requirements of the DWQMS;
- Ensuring staff are aware of the applicable legislative and regulatory requirements;
- Communicating the QEMS according to the Communications procedure (OP-12);
- Providing resources needed to maintain and continually improve the QEMS;
- Appointing and authorizing a QEMS Representative (OP-04); and
- Undertaking Management Reviews as per the Management Review procedure (OP-20).

Note: Specific responsibilities of the individual members of Top Management are identified in the referenced procedures.

3.3 Corporate Oversight

Roles, responsibilities and authorities for individuals/groups providing corporate oversight of OCWA's QEMS are summarized in Table 9-1 below.

Table 9-1: Corporate QEMS Roles, Responsibilities and Authorities

Role	Responsibilities and Authorities
Board of Directors	• Set the Agency's strategic direction, monitor overall performance and ensure appropriate systems and controls are in place in accordance with the Agency's governing documents • Review and approve the QEMS Policy
Senior Leadership Team (SLT)	• Establish the Agency's organizational structure and governing documents and ensure resources are in place to support strategic initiatives • Monitor and report on OCWA's operational and business performance to the Board of Directors • Review the QEMS Policy and recommend its approval to the Board • Approve corporate QEMS programs and procedures
Corporate Compliance	• Manage the QEMS Policy and corporate QEMS programs and procedures • Provide support for the local implementation of the QEMS • Monitor and report on QEMS performance and any need for improvement to SLT • Consult with the Ministry and other regulators and provide compliance support/guidance on applicable legislative, regulatory and policy requirements • Manage contract with OCWA's DWQMS accreditation body

3.4 Regional Hub Roles, Responsibilities and Authorities

QEMS roles, responsibilities and authorities of Regional Hub personnel are summarized in Table 9-2 below. This information is kept current as per the Document and Records Control procedure (OP-05) and is communicated to staff as per the Communications procedure (OP-12).

Additional duties of employees are detailed in their job specifications and in the various QEMS programs and procedures that form, or are referenced in, this Operational Plan.

Table 9-2: QEMS Roles, Responsibilities and Authorities for the Georgian Highlands Region

Role/Position	Responsibilities and Authorities
All Operations Personnel	• Perform duties in compliance with applicable legislative and regulatory requirements • Be familiar with the QEMS Policy and work in accordance with QEMS programs and procedures • Maintain operator certification (as required) • Attend/participate in training relevant to their duties under the QEMS • Document all operational activities • Identify potential hazards at their facility that could affect the environmental and/or public health and report to Operations Management • Report and act on all operational incidents • Recommend changes to improve the QEMS
Regional Hub Manager (Top Management)	• Oversee the administration and delivery of contractual water/wastewater services on a Regional Hub level • Fulfill role of Top Management • Ensure corporate QEMS programs and procedures are implemented consistently throughout the Regional Hub • Manages the planning of training programs for Regional Hub • Report to VP of Operations/SLT on the regional performance of the QEMS and any need for Agency-wide improvement
Operations Management (Top Management)	• Manage the day-to-day operations and maintenance of their assigned facilities and supervise facility operational staff • Fulfill role of Top Management • Ensure corporate and site-specific QEMS programs and procedures are implemented at their assigned facilities • Determine necessary action and assign resources in response to operational issues • Report to the Regional Hub Manager on facility operational performance

Role/Position	Responsibilities and Authorities
	• Ensure operational training is provided for the cluster (in consultation with the SPC Manager as required) • Act as Overall Responsible Operator (ORO) when required.
Safety, Process & Compliance (SPC) Manager (Top Management)	• Supervise facility compliance staff and provide technical and program support to the Regional Hub related to process control and compliant operations • Fulfill role of Top Management • Ensure corporate/regional QEMS programs and procedures are implemented consistently throughout the Regional Hub • Assist in the development of site-specific operational procedures as required • Ensure training on applicable legislative and regulatory requirements and the QEMS is provided for the Regional Hub (in consultation with Operations Management as required) • Monitor and report to the Regional Hub Manager and Operations Management on the compliance status and QEMS performance within their Regional Hub and any need for improvement • Act as alternate QEMS Representative (when required) • May act as Operator-in-Charge (OIC) and/or ORO when required (based on certification).
Process & Compliance Technician (PCT) (QEMS Representative)	• Implement, monitor and support corporate programs relating to environmental compliance and support management by evaluating and implementing process control systems at their assigned facilities • Fulfill role of QEMS Representative (OP-04) • Monitor, evaluate and report on compliance/quality status of their assigned facilities • Implement facility-specific QEMS programs and procedures consistently at their assigned facilities • Participate in audits and inspections and assist in developing, implementing and monitoring action items to respond to findings • Report to the SPC Manager on QEMS implementation and identify the need for additional/improved processes and procedures at the Regional Hub/cluster/facility level (in consultation with the Operations Management as required) • Communicates to Owners on facility compliance and DWQMS accreditation as directed • Deliver/participate in/coordinate training including applicable legislative and regulatory requirements and the QEMS • May fulfil role of Certified Operator when required (based on certification)

ORGANIZATIONAL STRUCTURE, ROLES, RESPONSIBILITIES AND AUTHORITIES

Reviewed by: Process & Compliance Technician | Approved by: Senior Operations Manager

Role/Position	Responsibilities and Authorities
Certified Operator May include the following positions: • Operations Supervisor Water & Wastewater • Water & Wastewater Lead • Senior Water & Wastewater Operator • Water & Wastewater Operator • Water & Wastewater Operator-In-Training (OIT)]	• Perform duties outlined under Operations Personnel • Monitor, maintain and operate facilities in accordance with applicable regulations, approvals and established operating procedures • Collect samples and perform laboratory tests and equipment calibrations as required • Regularly inspect operating equipment, perform routine preventive maintenance and repairs and prepare and complete work orders as assigned • Ensure records of adjustments made to the process under their responsibility, equipment operating status during their shifts and any departures from normal operations observed and actions taken are maintained within facility logs/record keeping mechanisms (as per O. Reg. 128) • Participate in facility inspections and audits • May act as OIC and/or ORO when required (based on certification). **NOTE:** OITs cannot act as OIC and/or ORO. OITs perform the above duties under the direction of the OIC/ORO and as assigned by Operations Management or designate.
Maintenance Personnel May include the following positions: • Mechanic/Operator • Maintenance Technician • Maintenance Shift Lead • Senior Water & Wastewater Operator	• Schedule and perform maintenance on equipment and processes in accordance with established procedures and record the maintenance data • Regularly inspect operating equipment, perform routine preventive maintenance and repairs • May fulfill role of Certified Operator when required (based on certification).
Instrumentation Technician May include the following positions: • Utility Plant Instrument Technician (UPIT) • Utility Plant Electrician Operator • Instrumentation Technician	• Provide advice and technical expertise on the services required for process control and automation systems • Discuss and advise on detailed system and programming requirements, modify existing and new software in response to plant requests, analyze and resolve problems/error conditions, document changes/modifications and configure, install and support related software, hardware and network for such systems • Conduct inspections of the process control and automation systems to validate that all is operating within established parameters as requested

Role/Position	Responsibilities and Authorities
• Operations Supervisor Water & Wastewater	• Install and commission new electrical/electronic equipment and automation systems • May fulfill role of Certified Operator as required (based on certification).
Electrical Maintenance Personnel May include the following positions: • Utility Plant Electrician Operator • Maintenance Electrician • Electrician Shift Lead	• Perform repairs, inspections, preventive maintenance and/or scheduled maintenance on electrical systems, equipment, components and devices in accordance with established procedures and record the maintenance data • Examine, trouble shoot and carry out systematic diagnostic testing of faults/failures, identification, assessment, repairs/service to equipment, fixtures and other electrical component • May fulfill role of Certified Operator as required (based on certification)
Administrative Assistant/Project Clerk	• Support the administrative functions of the Regional Hub/cluster/facility including coordinating delivery of training as directed • Assist with entering operational data (including operational training records, process data and maintenance records) into the appropriate database as directed

4. Related Documents

OP-03 Commitment and Endorsement
OP-04 QEMS Representative
OP-05 Document and Records Control
OP-09A Organizational Structure
OP-12 Communications
OP-20 Management Review
OCWA Position Descriptions/Job Specifications

5. Revision History

Date	Revision #	Reason for Revision
2018-08-31	0	Procedure issued – Information within OP-09 was originally set out in the main body of OCWA's Operational Plan (last revision 0 dated 2016-06-20). New Purpose, Definitions, Procedure, Related Documents and separate Revision History sections. Added definitions for Operations Management and Operations Personnel and throughout procedure replaced 'Senior Operations Manager' references with 'Operations Management'. Incorporated OCWA's new org structure, including SPC Manager. Removed two levels of Top Management (e.g. Facility Level and Corporate level), instead Top Management is only at the facility level and corporate has been moved to Corporate oversight. Re-worded QEMS Roles, Responsibilities and Authorities for each position. Added QEMS Roles, Responsibilities and Authorities for Administrative Assistant/Project Clerk.
2019-03-13	1	Updated to remove the OCWA positions that are not applicable for this particular area: Operations & Compliance Team Lead & Project Clerk.
2021-05-06	2	Removed names from Township staff referenced in Section 3.1 to accommodate for potential staff changes.
2022-03-25	3	Updated Section 3.1 Organization Structure to reflect that. The Township of Essa Drinking Water Systems are represented by the Manager of Public Works and CAO, previous version had it listed as Director of Public Works and CAO.
2024-08-22	4	Procedure updated [update revision history based on your current OP-09 revision history] with revisions to Table 9-2 as follows: Role/Position updated to clarify roles are performed by multiple positions, position titles updated, note added regarding OITs operating limitations. Additional revisions include replaced MOECC with Ministry, minor rewording and type-o's, removed watermark.

ORGANIZATIONAL STRUCTURE

Reviewed by: Process & Compliance Technician	Approved by: Senior Operations Manager

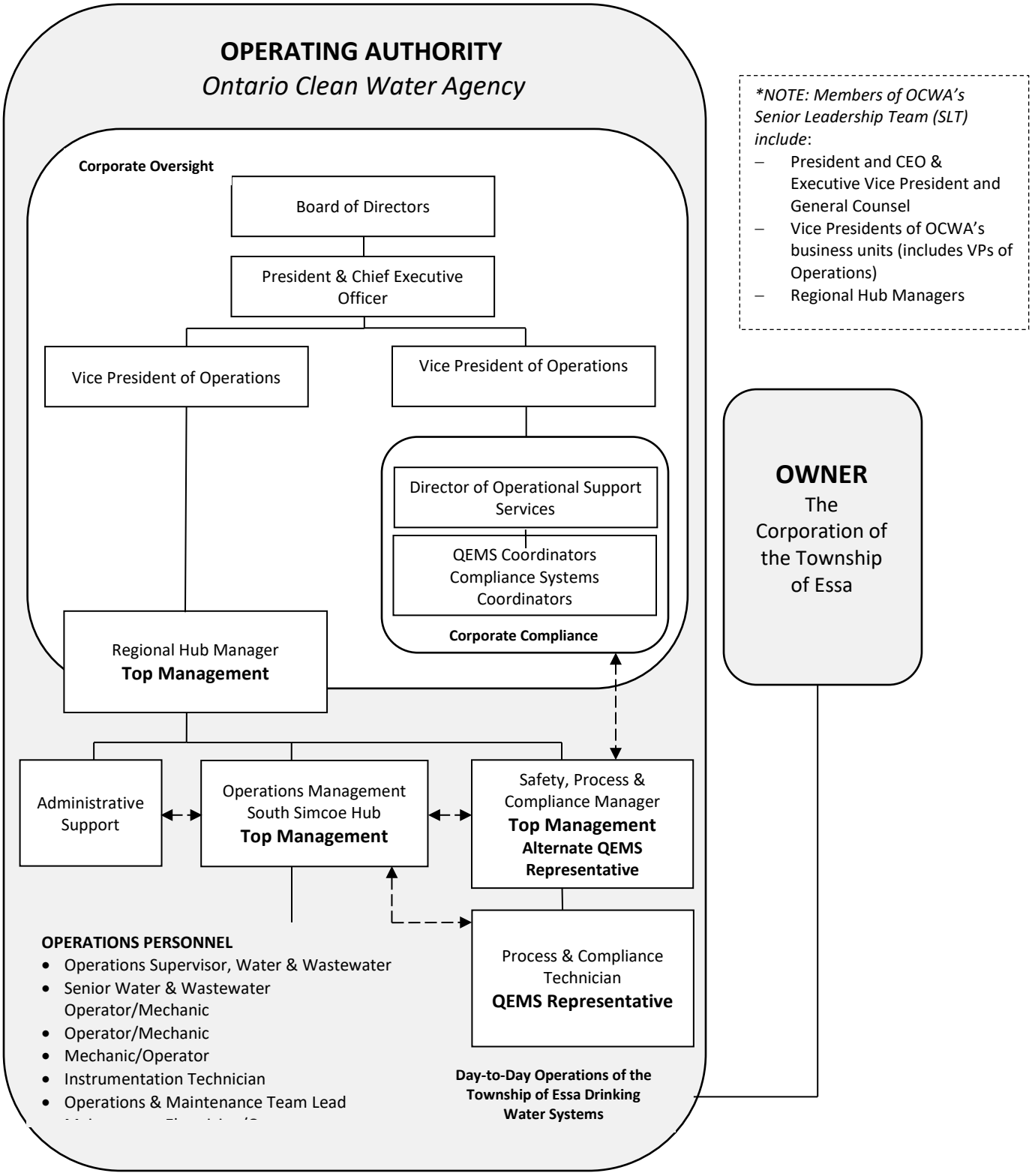

Revision History

Date	Revision #	Reason for Revision
2016-06-20	0	Appendix issued.
2018-08-31	1	Appendix issued following new template from Corporate Compliance. Organizational Chart was previously contained as Appendix C of the Operational Plan (last revision 0 dated 2016-06-20). Moved to Appendix OP-09A in new Operational Plan. New Revision History section. Incorporated OCWA's new org structure, including SPC Manager. Removed two levels of Top Management (e.g. Facility Level and Corporate level), instead Top Management is only at the facility level and corporate has been moved to Corporate oversight. Added Administrative Support.
2021-06-09	2	Revision to reflect change to reporting structure - Corporate Compliance now reports to VP of Operations.
2022-01-10	3	Removed name of Regional Hub Manager from the Organizational Structure Chart to account for potential staff changes.
2024-08-22	4	Revised to include Senior Leadership Team (SLT) in reporting structure and identify members, added Compliance System Coordinators, updated Operations Personnel position titles, removed watermark.

1. Purpose

To document a procedure that describes:

- the competencies required for personnel performing duties directly affecting drinking water quality;
- the activities to develop and/or maintain those competencies; and
- the activities to ensure personnel are aware of the relevance of their duties and how they affect safe drinking water.

2. Definitions

Competence – the combination of observable and measurable knowledge, skills, and abilities which are required for a person to carry out assigned responsibilities

Operations Management – refers to the General Manager, Senior Operations Manager and/or Operations Manager that directly oversees a facility's operations

Operations Personnel – employees of the drinking water system who perform various activities related to the compliance, operations and maintenance of the drinking water system that may directly affect drinking water quality

Top Management – a person, persons or a group of people at the highest management level within an operating authority that makes decisions respecting the QMS and recommendations to the Owner respecting the subject system or subject systems

3. Procedure

3.1 The following table presents the minimum competencies required by operations personnel.

Role/Position	Required Minimum Competencies
Operations Management (Top Management)	• Valid operator certification; if required to act as Overall Responsible Operator (ORO), certification must be at the level of the facility or higher • Experience and/or training in managing/supervising drinking water system operations, maintenance, financial planning and administration • Training and/or experience related to drinking water system processes, principles and technologies • Training on OCWA's QEMS and the DWQMS • Training on relevant legislation, regulations, codes, policies, guidelines and procedures • Experience using computers and operational computerized systems

COMPETENCIES

Reviewed by: Process & Compliance Technician | Approved by: Senior Operations Manager

Role/Position	Required Minimum Competencies
Safety, Process & Compliance (SPC) Manager (Top Management) (May also fulfill the role of Alternate QEMS Representative)	• Valid operator certification required to fulfil certified operator duties (if assigned). • Experience in providing technical support and leading/managing programs related to process control and compliant operations • Experience and/or training in conducting compliance audits, and management system audits • Experience and/or training in preparing and presenting informational and training material • Training on OCWA's QEMS and the DWQMS • Training on relevant legislation, regulations, codes, policies, guidelines and procedures • Experience using computers and operational computerized systems
Process & Compliance Technician, Operations and Compliance Team Lead (QEMS Representative)	• Valid operator certification required to fulfil certified operator duties (if assigned) • Experience and/or training in resolving/addressing compliance issues for drinking water systems • Experience and/or training in monitoring, assessing and reporting on facility performance against legal requirements and corporate goals • Experience and/or training in preparing and presenting informational and training material • Experience in conducting management system audits or internal auditor education/training • Training on OCWA's QEMS and the DWQMS • Training on relevant legislation, regulations, codes, policies, guidelines and procedures • Experience using computers and operational computerized systems
Certified Operator May include the following: • Operations Supervisor Water & Wastewater • Water & Wastewater Lead • Senior Water & Wastewater Operator • Water & Wastewater Operator • Water & Wastewater Operator-in-Training	• Valid operator certification • If required to act as ORO, certification must be at the level of the facility or higher • If required to act as Operator-in-Charge (OIC), certification must be level 1 or higher • Training and/or experience in inspecting and monitoring drinking water system processes and performing/planning maintenance activities • Training on OCWA's QEMS and the DWQMS • Training on relevant legislation, regulations, codes, policies, guidelines and procedures • Experience using computers and operational computerized systems

COMPETENCIES

Reviewed by: Process & Compliance Technician | Approved by: Senior Operations Manager

Role/Position	Required Minimum Competencies
Maintenance Personnel May include the following: • Mechanic/Operator • Maintenance Technician • Maintenance Shift Lead • Operations Supervisor Water & Wastewater etc.	• Valid operator certification required to fulfil certified operator duties (if assigned) • Millwright and/or other trades certificates • Experience in maintaining and repairing equipment and structures and in planning and scheduling maintenance and repair tasks • Training and/or experience related to drinking water system processes • Training on OCWA's QEMS and the DWQMS • Training on relevant legislation, regulations, codes, policies, guidelines and procedures • Experience using computers and operational computerized systems
Instrumentation Technician May include the following: • Utility Plant Instrument Technician • Instrumentation Technician	• Valid operator certification required to fulfil certified operator duties (if assigned) • Experience and/or training in monitoring, programming, installing and troubleshooting network, hardware, software and instrumentation • Experience and/or training in drinking water system processes, design, instrumentation, process control and automation systems • Training on OCWA's QEMS and the DWQMS • Training on relevant legislation, regulations, codes, policies, guidelines and procedures • Experience using computers and operational computerized systems
Electrical Maintenance Personnel May include the following: • Utility Plant Electrician Operator • Maintenance Electrician • Electrician Shift Lead	• Valid operator certification required to fulfil certified operator duties (if assigned) • Completion of any electrical or electronic training program certified by the Ministry of Advanced Education and Skills Development (formerly the Ministry of Training, Colleges and Universities) • Experience in performing maintenance and repair of electrical and electronic equipment • Training on OCWA's QEMS and the DWQMS • Training on relevant legislation, regulations, codes, policies, guidelines and procedures • Experience using computers and operational computerized systems

3.2 The following table presents the minimum competencies required by staff who provide administrative support to operations personnel.

Role and/or Position	Required Minimum Competencies
Administrative Staff May include the following: Administrative Assistant Project Clerk	• Experience and/or training related to procurement and business administration practices • Training on OCWA's QEMS and the DWQMS • Training on relevant legislation, regulations, codes, policies, guidelines and procedures • Experience using computers

3.3 OCWA's recruiting and hiring practices follow those of the Ontario Public Service (OPS). As part of the OPS, minimum competencies, which include education, skills, knowledge and experience requirements, are established when designing the job description for a particular position. As part of the recruitment process, competencies are then evaluated against the job description. Based on this evaluation, the hiring manager selects and assigns personnel for specific duties.

3.4 OCWA's Operational Training Program aims to:

- Develop the skills and increase the knowledge of staff and management;
- Provide staff with information and access to resources that can assist them in performing their duties; and
- Assist OCWA certified operators in meeting the legislative and regulatory requirements with respect to training.

3.5 The Program consists of Director Approved, continuing education and on-the-job training and is delivered using a combination of methods (e.g., traditional classroom courses, e-learning/webinars and custom/program-based courses/sessions). A formal evaluation process is in place for all sessions under the Operational Training Program and is a critical part of the Program's continual improvement.

3.6 Awareness of OCWA's QEMS is promoted during the orientation of new staff, at facility/cluster/regional hub level training sessions and meetings and through OCWA's Environmental Compliance 101 (EC 101) course. All new staff are required to complete the EC 101 course within their first year of joining OCWA. The purpose of the EC 101 course is to ensure staff are aware of applicable legislative and regulatory requirements, to promote awareness of OCWA's QEMS and to reinforce their roles and responsibilities under OCWA's QEMS.

3.7 Staff are also required to complete the training listed in OCWA's Mandatory Training Requirements procedure, based on their position and/or the duties they perform. This list includes mandatory environmental and health and safety compliance training, as well as the training deemed mandatory by OCWA corporate and Ontario Public Service (OPS) policies and is available on OCWA's intranet (sharepoint site).

3.8 Operations personnel also receive site-specific training/instruction on relevant operational and emergency response procedures to ensure effective operational control of processes and equipment which may impact the safety and quality of drinking water.

3.9 As part of OCWA's annual Performance Planning and Review (PPR) process, employee performance is evaluated against their job expectations. Professional development opportunities and training needs (which could include formalized courses as well as site-specific on-the-job training or job shadowing/mentoring) are identified as part of this process (and on an ongoing basis). In addition to this process, OCWA employees may at any time request training from either internal or external providers by obtaining approval from their Manager.

3.10 Certified drinking water operators are responsible for completing the required number of training hours in order to renew their certificates based on the highest class of drinking water subsystem they operate. They are also responsible for completing mandatory courses required by *Safe Drinking Water Act* (SDWA) O. Reg. 128/04 Certification of Drinking Water System Operators and Water Quality Analysts. The Operations Management takes reasonable steps to ensure that every operator has the opportunity to attend training to meet the requirements.

3.11 It is the responsibility of operations personnel to ensure Operations Management are aware of any change to the status/classification of their drinking water operator certificate(s), the validity of their driver's licence (required to hold at a minimum a Class G license which is initially verified upon hire) and/or the validity of any other required certificates/qualifications.

3.12 Individual OCWA employee training records are maintained and tracked using a computerized system, the Training Summary database, which is administrated by OCWA's Learning and Development Department. Training records maintained at the facility are controlled as per OP-05 Document and Records Control.

4. Related Documents

OCWA's Learning and Development Resources (OCWA Intranet/sharepoint)
[Orientation checklists/documentation]
OCWA's Mandatory Training Requirements (OCWA intranet/sharepoint)
Performance Planning and Review Database
OP-5 Document and Records Control
OCWA Training Summary Database

5. Revision History

Date	Revision #	Reason for Revision
2018-08-31	0	Procedure issued – Information within OP-10 was originally set out in the main body of OCWA's Operational Plan (last revision 0 dated 2016-06-20). New Purpose, Definitions, Procedure, Related Documents and

Date	Revision #	Reason for Revision
		separate Revision History sections. Added definitions for Operations Management and Operations Personnel and throughout procedure replaced 'Senior Operations Manager' references with 'Operations Management'. Modified table in procedure (sections 3.1 and 3.2): removed/revised non-measurable competencies, added the word 'minimum' to competencies; removed 'Valid Class G Driver's License' listed under individual positions and referenced in section 3.11; added competencies for SPC Managers and Admin Assistants and merged competencies for Senior Operations Manager and Operations Manager under Operations Management. Updated training sections (sections 3.4 to 3.7) to reference new Environmental 101 course, Mandatory Compliance Training list and removed specific references to Orientation Training Program. Added section 3.11 related to ensuring operators make Operations Management aware of changes to operator certification and other certificates/licenses. Other minor changes to wording.
2019-03-13	1	Updated to remove the OCWA positions that are not applicable for this particular area: Operations & Compliance Team Lead & Project Clerk.
2024-01-16	2	Updated references of OCWA's intranet to OCWA Sharepoint site. Updated the minimum Valid operator certification for all positions to include descriptions on minimum licensing (OIT) and/or what is required to act as OIC and ORO for the Essa Systems.
2024-08-23	3	Procedure updated [update revision history based on your current OP-10 revision history] with revisions to table in 3.1 Role/Position updated to clarify roles are performed by multiple positions, position titles updated, removed watermark, updated Procedure to reflect changes to title and content of OCWA's Mandatory Training Requirements Document, added sharepoint.

PERSONNEL COVERAGE

Reviewed by: Process & Compliance Technician | Approved by: Senior Operations Manager

1. Purpose

To describe the procedure for ensuring that sufficient and competent personnel are available for duties that directly affect drinking water quality at the Township of Essa Drinking Water Systems.

2. Definitions

Competency – an integrated set of requisite skills and knowledge that enables an individual to effectively perform the activities of a given occupation *

Essential Services – services that are necessary to enable the employer to prevent,

(a) danger to life, health or safety,
(b) the destruction or serious deterioration of machinery, equipment or premises,
(c) serious environmental damage, or
(d) disruption of the administration of the courts or of legislative drafting.

(*Crown Employees Collective Bargaining Act*, 1993)

3. Procedure

3.1 Operations Management ensures that personnel meeting the competencies identified in OP-10 Competencies are available for duties that directly affect drinking water quality.

3.2 The Township of Essa Drinking Water Systems are staffed by OCWA personnel as follows: 7:30 a.m. to 4:00 p.m. Monday to Friday

3.3 Operations personnel are assigned to act as and fulfill the duties of Overall Responsible Operator (ORO) and Operator-in-Charge (OIC) in accordance with SDWA O. Reg. 128/04.

The Senior Operations Manager designates an overall responsible operator (ORO) for Water Distribution and Supply in the Georgian Highlands Region – South Simcoe Hub. When the ORO is unavailable, the Back-Up ORO is designated as the ORO and is recorded as such in the facility logbook. Refer to the current ORO posting at the facilities. The designated OIC for each shift is recorded in the facility logbook.

3.4 The Senior Operations Manager or designate assigns an on-call Operator based on the on-call schedule for the time that the facility is un-staffed (i.e. evenings, weekends, and Statutory Holidays) to be available for return to work 24/7. The on-call shift change is generally at the end of the business day on the Thursday of each week. The on-call schedule is developed by the Operators that are on-call for this water system and given to the Senior Operations Manager or designate for approval.

* Based on the *2005 National Occupational Guidelines for Canadian Water and Wastewater Operators* and International Board of Standards for Training, Performance and Instruction

3.5 The on-call Operator does not conduct a physical inspection of the facility during the weekends. However, during long (e.g. three-day) weekends due to Statutory Holidays, the on-call Operator does a physical inspection of the facility, typically on the Sunday. Details of the inspection are recorded in the facility logbook and daily round sheets.

3.6 The auto dialer is programmed to contact a contracted call-centre operator whenever there is an alarm condition. The call-centre operator contacts the on-call Operator through a designated text page. The on-call Operator contacts the call-centre to obtain the details of the alarm to determine the appropriate response. If the nature of the alarm requires additional staff, the on-call Operator can request assistance from the Hub Contact or any of the other Certified Operators. The on-call Operator records details of the call-in in the facility logbook and in the Call-In Report within WMS.

3.7 Each manager (e.g. Operations Management/SPC Manager) is responsible for approving vacation time for their staff in a manner which ensures sufficient personnel are available for the performance of normal operating duties.

3.8 OCWA's operations personnel are represented by the Ontario Public Service Employees Union (OPSEU). In the event of a labour disruption, Operations Management, together with the union, identifies operations personnel to provide "essential services" required to operate the facility so that the quality of drinking water is not compromised in any way.

3.9 A contingency plan for Critical Shortage of Staff is included in the Facility Emergency Plan. This plan provides direction in the event that there is a severe shortage of operations personnel due to sickness (e.g., pandemic flu) or other unusual situations.

4. Related Documents

OP-10 Competencies
Facility Logbook
Daily Round Sheets
On-Call Schedule
Call-In Reports
Shift/Vacation Schedule
Critical Shortage of Staff Contingency Plan (Facility Emergency Plan)

5. Revision History

Date	Revision #	Reason for Revision
2016-06-20	0	Procedure issued.
2018-08-31	1	Procedure issued following new template from Corporate Compliance. QP-03 procedure renamed OP-11. Removed Responsibilities and Scope sections. Other minor edits in wording.
2025-01-16	2	Reviewed and updated the procedure with minor wording and format changes. Removed watermark.

1. Purpose

To describe the procedure for facility level internal and external QEMS-related communications between Top Management (or designate) and:

- OCWA staff;
- the Owner;
- essential suppliers and service providers (as identified in OP-13); and
- the public.

2. Definitions

Operations Management – refers to the General Manager, Senior Operations Manager and/or Operations Manager that directly oversees a facility's operations

Operations Personnel – employees of the drinking water system who perform various activities related to the compliance, operations and maintenance of the drinking water system that may directly affect drinking water quality.

3. Procedure

3.1 Operations Management and the QEMS Representative are responsible for identifying and coordinating any site-specific communications in relation to the status and development of the facility's QEMS.

3.2 Internal and external communication responsibilities and reporting requirements for emergency situations are set out under OCWA's Emergency Management Program (i.e., Facility Emergency Plan and OCWA's Corporate Emergency Response Plan). Refer to OP-18 Emergency Management for more information.

3.3 Communication with OCWA staff:

3.3.1 Within the first year of hire, all staff are required to complete the Environmental Compliance 101 (EC101) course. The objective of the EC 101 course is to ensure that Staff are aware of applicable legislative and regulatory requirements and of OCWA's QEMS and to reinforce their roles and responsibilities under OCWA's QEMS.

3.3.2 Operations Management are responsible for ensuring operations personnel receive site-specific training on the Operational Plan, the organizational structure for the facility including the roles and responsibilities and authorities (outlined in OP-09 Organizational Structure, Roles, Responsibilities and Authorities), QEMS Procedures and other related operating instructions and procedures as part of the orientation process and on an on-going basis as required.

3.3.3 The SPC Manager is responsible for ensuring training is provided for the Regional Hub (in consultation with Operations Management as required) on applicable legislative and regulatory requirements and the QEMS.

3.3.4 The QEMS Representative assists Operations Management and/or the SPC Manager in the coordination/delivery of training as required.

3.3.5 Revisions to the QEMS and associated documentation are communicated as per OP-05 Document and Records Control.

3.3.6 The QEMS Policy is available to all OCWA personnel through OCWA's Sharepoint Site and as outlined in 3.6.2 of this procedure.

3.3.7 Operations personnel are responsible for identifying potential hazards at the facility that could affect the environmental and/or public health, and communicating these to Operations Management. They may also recommend changes be made to improve the facility's QEMS by making a request to the QEMS Representative (as per OP-05).

3.3.8 The QEMS Representative is responsible for ensuring that the Operations Management and the Safety, Process and Compliance Manager are informed regarding the compliance/quality status of the facility and QEMS implementation and any need for improved processes/procedures at the facility level.

3.3.9 The SPC Manager reports to the Regional Hub Manager on the compliance status, the QEMS performance and effectiveness, any need for improvement and on issues that may have Agency-wide significance. Operations Management reports to the Regional Hub Manager on facility operational performance.

3.4 Communication with the Owner:

3.4.1 The Regional Manager, Operations Management or designate ensures that the Owner is provided with QEMS updates and that they are kept informed of the status of the facility's operational and compliance performance during regularly scheduled meetings and/or through electronic and/or verbal communications. The QEMS Representative assists in the coordination of these meetings and with communicating the updates as directed.

3.4.2 The continuing suitability, adequacy and effectiveness of OCWA's QEMS are communicated to the Owner as part of the Management Review process (refer to OP-20 Management Review).

3.5 Communications with Essential Suppliers and Service Providers:

3.5.1 Communication requirements to ensure essential suppliers and service providers understand the relevant OCWA QEMS policies, procedures and expectations are

described in OP-13 Essential Supplies and Services. This communication is completed by the QEMS Representative/PCT instead of Top Management.

3.6 Communication with the Public:

3.6.1 Media enquiries must be directed to the facility's designated media spokesperson as identified in the Facility Emergency Plan. The media spokesperson coordinates with local and corporate personnel (as appropriate) and the Owner in responding to media enquiries.

3.6.2 OCWA's QEMS and QEMS Policy are communicated to the public through OCWA's public website (www.ocwa.com). The QEMS Policy is also posted at the South Simcoe Hub main report to facility- Angus Water Pollution Control Plant (WPCP).

3.6.3 Facility tours of interested parties must be approved in advance by the Operations Management. Refer to Plant Tour Records if applicable.

3.6.4 All complaints, whether received from the consumer, the community or other interested parties, are documented in the WMS. As appropriate, the Operations Management ensures that the Owner is informed of the complaint and/or an action is developed to address the issue in a timely manner. The QEMS Representative ensures that consumer feedback is included for discussion at the Management Review.

4. Related Documents

OP-05 Document and Records Control
OP-09 Organizational Structure, Roles, Responsibilities and Authorities
OP-13 Essential Supplies and Services
OP-18 Emergency Management
OP-20 Management Review
Facility Emergency Plan
Corporate Emergency Response Plan
Work Management System (WMS)
Plant Tour Records

5. Revision History

Date	Revision #	Reason for Revision
2016-06-20	0	Procedure issued.
2018-08-31	1	Procedure issued following new template from Corporate Compliance. QP-04 procedure renamed OP-12. Removed Responsibilities and Scope sections. Added definitions for Operations Management and Operations Personnel. Reordered and created separate sections to clarify communications to each of the 4 parties. Clarified suppliers were those listed as essential as per Element 13 (as per DWQMS v. 2.0) and

Date	Revision #	Reason for Revision
		replaced references to Senior Operations Manager with 'Operations Management'. Updated training sections for OCWA personnel (sections 3.3.1 to 3.3.4) to reference new Environmental Compliance 101 course completed within first year of hire and to outline how training is coordinated between SPC Manager/Operations Management, and QEMS Representative. SPC Manager listed as the responsible party in section 3.3.3 instead of QEMS Representative. Included sections on Roles and Responsibilities for performance reporting within OCWA (sections 3.3.7 to 3.3.9) and to Client (section 3.4.1). Replaced identification of media spokesperson (section 3.6.1) with 'as identified in Facility Emergency Plan'. Added reference to site-specific records/documents used for recording tours (section 3.6.3). Other minor edits.
2019-03-13	2	Updated to include clarification on the communication protocol with essential supplies and services contractors; specifically that the QEMS Representative/PCT provides the QEMS letter instead of Top Management as per External Audit (2019-02-13). Removed R&R acronym from revision history as per Internal Audit (2018-10-30).
2021-06-09	3	Removed references to OPEX Database; replaced community complaint entries to utilize WMS
2024-01-16	4	Replaced that the QEMS is posted at the "regional hub office" to the QEMS Policy is also posted at the "South Simcoe Hub main report to facility- Angus Water Pollution Control Plant (WPCP)" replaced reference to OCWA's intranet to "Sharepoint Site".
2024-08-23	5	Procedure revised to reference updated title of Corporate Emergency Response Plan, removed watermark. Removed OPEX from related documents and replaced with Work Management System (WMS)

ESSENTIAL SUPPLIES AND SERVICES

1. Purpose

To describe OCWA's procedures for procurement and for ensuring the quality of essential supplies and services.

2. Definitions

Essential Supplies and Services – supplies and services deemed to be critical to the delivery of safe drinking water

3. Procedure

3.1 Essential supplies and services lists for the Township of Essa Drinking Water Systems are contained in the Facility Emergency Plan, Essential Supplies and Services List. The list is reviewed and updated at least once every calendar year by the QEMS Representative.

3.2 Purchasing is conducted in accordance with OCWA's Corporate Procurement and Administration policies, procedures and guidelines, which are adopted from those of the Ontario Public Service. Purchases of capital equipment are subject to formal approval by the facility's owner.

3.3 As part of the corporate procurement process, potential suppliers/service providers are informed of relevant aspects of OCWA's QEMS through the tendering process and through specific terms and conditions set out in our agreements and purchase orders. Essential suppliers and service providers (including those contracted locally) are sent a letter that provides an overview of the relevant aspects of the QEMS.

3.4 Contractors are selected based on their qualifications and ability to meet the facility's needs without compromising operational performance and compliance with applicable legislation and regulations.

Contracted personnel including suppliers may be requested or required to participate in additional relevant training/orientation activities to ensure conformance with facility procedures and to become familiar with OCWA workplaces.

If necessary, appropriate control measures are implemented while contracted work is being carried out and communicated to all relevant parties to minimize the risk to the integrity of the drinking water system and the environment.

3.5 All third-party drinking water testing services are provided by accredited and licensed laboratories. The Ministry has agreement with the Canadian Association for Laboratory Accreditation (CALA) for accreditation of laboratories testing drinking water. The QEMS Representative is responsible for notifying the Ministry of any change to the drinking water testing services being utilized.

3.6 Internal verification and calibration activities (e.g. chlorine analyzer, turbidimeter, etc.) are conducted by operations personnel in accordance with equipment manuals and/or procedures (refer to OP-17 Measurement Recording Equipment Calibration and Maintenance).

3.7 External calibration activities (e.g. flow meters) are conducted by qualified third-party providers. Qualifications of the service provider are verified during the procurement process. The service provider is responsible for providing a record/certificate of all calibrations conducted.

3.8 Chemicals purchased for use in the drinking water treatment process must meet AWWA Standards and be ANSI/NSF certified as per the Municipal Drinking Water Licence (MDWL).

3.9 The facility orders and receives ongoing deliveries of chemicals to satisfy current short-term needs based on processing volumes and storage capacities. Incoming chemical orders are verified by reviewing the manifest or invoice in order to confirm that the product received is the product ordered.

3.10 Process components/equipment provided by the supplier must meet applicable regulatory requirements and industry standards for use in drinking water systems prior to their installation.

4. Related Documents

Essential Supplies and Services List
OP-17 Measurement Recording Equipment Calibration and Maintenance
ANSI/NSF Documentation
AWWA Standards
MDWL
Calibration Certificates/Records

5. Revision History

Date	Revision #	Reason for Revision
2016-06-20	0	Procedure issued.
2018-08-31	1	Procedure updated following new template from Corporate Compliance. QP-05 procedure renamed OP-13. Removed Responsibilities and Scope sections. Changes to wording to provide clarification on ensuring quality of essential supplies and services (sections 3.5, 3.6, 3.7 and 3.9).
2025-01-16	7	Any reference to the MECP was updated to the Ministry. Removed watermark.

REVIEW AND PROVISION OF INFRASTRUCTURE

1. Purpose

To describe OCWA's procedure for reviewing the adequacy of infrastructure necessary to operate and maintain the Township of Essa Drinking Water Systems.

2. Definitions

Infrastructure – the set of interconnected structural elements that provide the framework for supporting the operation of the drinking water system, including buildings, workspace, process equipment, hardware, software and supporting services, such as transport or communication

3. Procedure

3.1 At least once every calendar year, Operations Management in conjunction with the applicable operations personnel conduct a review of the drinking water system's infrastructure to assess its adequacy for the operation and maintenance of the system. Operations personnel assist with identifying the need for infrastructure repairs, replacements or alterations and with prioritizing each identified item. Documents and records that are reviewed may include:

- Maintenance records
- Call-in reports
- Adverse Water Quality Incidents (AWQIs) or other incidents
- Health & Safety Inspections
- Ministry Inspection Reports
- Facility Logbooks
- Operational Staff Suggestions
- DWQMS Management Review

3.2 The outcomes of the risk assessment documented as per OP-08 are considered as part of this review.

3.3 The output of the review is a multi-year rolling Capital and Major Maintenance Recommendations Report to assist the Owner and OCWA with planning infrastructure needs for the short and long-term. This report is submitted, at least once every calendar year by Operations Management, to the Owner for review and approval. Together with the Owner, Operations Management determines and documents timelines and responsibilities for implementation of priority items.

3.4 The final approved Capital and Major Maintenance Recommendations Report forms the long term forecast for any major infrastructure maintenance, rehabilitation and renewal activities as per OP-15.

3.5 Operations Management ensures that results of this review are considered during the Management Review process (OP-20).

4. Related Documents

Capital and Major Maintenance Recommendations Report & Acknowledgement/Approval from the Owner
OP-08 Risk Assessment Outcomes
OP-15 Infrastructure Maintenance, Rehabilitation and Renewal
OP-20 Management Review
Management Review Minutes

5. Revision History

Date	Revision #	Reason for Revision
2016-06-20	0	Procedure issued.
2018-08-31	1	Procedure updated following new template from Corporate Compliance. QP-06 procedure renamed OP-14. Removed Responsibilities and Scope sections. Replaced 'once every 12 months' with 'once every calendar year' (section 3.1) to reflect wording in DWQMS v. 2.0. Added section 3.2 to consider the outcomes of the risk assessment under Element 8 during the review to reflect wording in DWQMS v. 2.0. Changes to wording to provide clarification on who is required to attend the review and what documents and records may be considered during the review (section 3.1). Linked the procedure with OP-15 in terms of documenting a long-term forecast (sections 3.3 and 3.4).
2024-01-16	2	Updated reference to "6 year Capital Spreadsheet" to "Multi-year rolling Capital and Major Maintenance Recommendations Report."
2025-01-16	3	Removed watermark. Updated MECP to Ministry.

INFRASTRUCTURE MAINTENANCE, REHABILITATION AND RENEWAL

1. Purpose

To describe OCWA's infrastructure maintenance, rehabilitation and renewal program for the Township of Essa Drinking Water Systems

2. Definitions

Infrastructure – the set of interconnected structural elements that provide the framework for supporting the operation of the drinking water system, including buildings, workspace, process equipment, hardware, software and supporting services, such as transport or communication

Rehabilitation – the process of repairing or refurbishing an infrastructure element.

Renewal – the process of replacing the infrastructure elements with new elements.

3. Procedure

3.1 OCWA, under contract with the Owner, maintains a computerized Work Management System (WMS) to manage maintenance, rehabilitation and renewal of infrastructure for which it is operationally responsible. The major components of the WMS consist of planned maintenance, unplanned maintenance, rehabilitation, renewal and program monitoring and reporting.

3.1.1 Planned Maintenance

Routine planned maintenance activities include: pump inspection, analyzer calibrations, flow meter calibrations, valve inspection, hydrant flushing and inspections, reservoir inspections, backup diesel operation, weekly inspections of the facility, etc.

Planned maintenance activities are scheduled in the WMS that allows the user to:

- Enter detailed asset information;
- Generate and process work orders;
- Access maintenance and inspection procedures;
- Plan preventive maintenance and inspection work;
- Plan, schedule and document all asset related tasks and activities; and
- Access maintenance records and asset histories.

Planned maintenance activities are communicated to the person responsible for completing the task through the issuance of WMS work orders. Work orders are automatically generated on a weekly, monthly, quarterly and annual schedule as determined based on manufacturer's recommendations and site specific operational and maintenance needs and are assigned directly to the appropriate operations personnel. This schedule is set up by the WMS Primary, Operations Management, Operations Supervisor, O&M Team Lead and/or applicable Operations personnel. Work orders are completed and electronically entered into

WMS by the person responsible for completing the task. Records of these activities are maintained as per OP-05 Document and Records Control.

The WMS Primary, Operations Management, Operations Supervisor, Asset Management Specialist, and/or O&M Team Lead maintain the inventory of equipment in WMS and ensure that appropriate maintenance plans are in place. Maintenance plans are developed according to the manufacturer's instructions, regulatory requirements, industry standards, and/or client service requirements. Equipment Operation and Maintenance (O&M) manuals are accessible to operations personnel at the locations specified in OP-05 Document and Records Control.

3.1.2 Unplanned Maintenance

Unplanned maintenance is conducted as required. All unplanned maintenance activities are authorized by the Operations Management. Unplanned maintenance activities are recorded on corrective work orders and are entered into WMS by the person responsible for completing the unplanned maintenance activity.

3.1.3 Rehabilitation and Renewal

Rehabilitation and renewal activities including capital upgrades (major infrastructure maintenance) are determined at least once every calendar year in consultation with Operations Management and the Owner. A list of required replacement or desired new equipment is compiled and prioritized by Operations Management in conjunction with operations personnel and is presented to the Owner for review and comment. All major expenditures require the approval of the Owner. In addition to the short-term facility needs (i.e. current year), the Capital and Major Maintenance Recommendations Reports also provides a long-term (i.e. multi-year rolling) list of major maintenance recommendations (refer to OP-14 Review and Provision of Infrastructure).

3.1.4 Program Monitoring and Reporting

Maintenance needs for the facility are determined through review of manufacturer's instructions, regulatory requirements, industry standards, and/or client service requirements and are communicated by means of work orders. Additionally, Operations Management and Operations personnel (e.g. Senior Operator, O&M Team Lead, etc.) conduct a review of the drinking water system's infrastructure to assess its adequacy for the operation and maintenance of the system (refer to OP-14 Review and Provision of Infrastructure).

To assist in monitoring the effectiveness of the program, the WMS is set up so Senior Operations Managers can track the Work Order Status by using the start centre for review of work order completion rate. This report tracks corrective, preventative, weekly, capital and operational work orders in terms of incomplete

work orders for all facilities in the South Simcoe Hub, including the Township of Essa Drinking Water Systems.

3.2 OCWA's infrastructure maintenance, rehabilitation and renewal program is initially communicated to the Owner through the operating agreement. OCWA's program is communicated to the Owner at a minimum of at least once every calendar year through submission of the Capital and Major Maintenance Recommendations Report and through the results of the Management Review.

4. Related Documents

Minutes of Management Review
Capital and Major Maintenance Recommendations Report & Acknowledgement/Approval from the Owner
Equipment Operations & Maintenance Manuals
OP-05 Document and Records Control
OP-14 Review and Provision of Infrastructure

5. Revision History

Date	Revision #	Reason for Revision
2018-08-31	0	Procedure issued – Information within OP-15 was originally set out in the Main Body of OCWA's Operational Plan (last revision 0 dated 2016-06-20). New Purpose, Definitions, Procedure, Related Documents and separate Revision History sections. Added the requirement to ensure the long term forecast is reviewed at once every calendar year and to document a long term forecast (section 3.1.3) to reflect in DWQMS v. 2.0. Minor wording updates to reflect OCWA's current WMS.
2019-03-13	1	Clarified which position creates the Hub Work Order Report (i.e. SPC Manager) referenced in section 3.1.4 and the contents of the report.
2022-03-25	2	Updated section 3.1.4 Program Monitoring and Reporting, to reflect how Hub Work Orders are monitored in the Work Management System- by Senior Operations Managers who can track the Work Order Status by using the start centre for review of w/o completion rate
2024-01-16	3	Updated reference to the Capital Works Spreadsheet to the Capital and Major Maintenance Recommendations Report.
2025-01-16	6	Removed watermark. Added in mentions to the Operations Supervisor and Asset Management Specialist roles.

1. Purpose

To describe the procedure for sampling, testing and monitoring for process control and finished drinking water quality.

2. Definitions

Challenging Conditions – any existing characteristic of the water source or event-driven fluctuations that impact the operational process as identified and listed under OP-06 Drinking Water System

3. Procedure

3.1 All sampling, monitoring and testing is conducted at a minimum in accordance with SDWA O. Reg. 170/03, the facility's Municipal Drinking Water License (MDWL) as well as sampling/testing and monitoring requirements listed within the facility's Permit to Take Water (e.g. recording monitoring well levels).

3.2 Sampling requirements for the facility are defined in the facility's sampling schedule, plan, and/or calendar which are available to Operations personnel at the location(s) noted in OP-05 Document and Records Control. The sampling schedule is maintained by the PCT and is updated as required.

3.3 Samples that are required to be tested by an accredited and licensed laboratory, are collected, handled and submitted according to the directions provided by the licensed laboratory(ies) that conducts the analysis. The laboratory(ies) used for this facility are listed in the Essential Supplies and Services List (within the Facility Emergency Plan (FEP)).

Electronic and/or hardcopy reports received from the laboratory are maintained as per OP-05 Document and Records Control. Analytical results from laboratory reports are uploaded into OCWA's Process Data Management system (PDM).

3.4 Continuous monitoring equipment is used to sample and test for treated water free chlorine residual and at Angus DWS distribution free chlorine residual. Test results from continuous monitoring equipment are captured by the SCADA system and are reviewed by a certified operator in accordance with the requirements of SDWA O. Reg. 170/03.

The SCADA system also collects and records information on the following parameters related to process control and finished drinking water quality:

- Raw and Treated Water Flow and Rates
- Reservoir Levels (Mill Street, McGeorge & Brownley)
- Tower Levels (Baxter & Thornton)
- System Pressures (at all facilities)

The SOP titled "72 Hour Review" and the SOP for "72 Hour Weekend Checks" provides additional information on the SCADA system. These Standard Operating Procedures are included in the Operations Manuals and/or Facility Emergency Plans.

3.5 Adverse water quality incidents are responded to and reported as per SOP for "Adverse Water Quality," which is located within the FEP.

3.6 In-house process control activities are conducted on a regular basis by the certified operator(s) on duty and are as follows:

Operational Parameter	Location	Frequency
Turbidity	Raw water tap of each well at each facility	Grab monthly
Free Chlorine	Treated water tap at each facility	During facility checks between Monday to Friday - Grab
Free Chlorine	Distribution	Continuous distribution free chlorine residual analyzer- 1 min intervals- (Angus DWS) Large Municipal Residential System (Thornton DWS): At least seven (7) Grab samples a week with at least 4 on one day and 3 on a 2nd day and must be taken at least 48 hours apart between sampling days. Small Municipal Residential Systems (Baxter): At least 2 each week and must be taken at least 48 hours apart and during same week.

In-house samples are analyzed following approved laboratory procedures. The sampling results are recorded on the corresponding monthly data sheet and the results are entered into PDM. Any required operational process adjustments are recorded in the facility log book.

3.7 There are no additional sampling, testing and monitoring activities related to the system's most challenging conditions as these conditions are not applicable.

3.8 There are no relevant upstream sampling, testing, and monitoring activities that take place for these facilities.

3.9 Sampling, testing and monitoring results are readily accessible to the Owner through OCWA.

At a minimum, Owners are provided with an annual summary of sampling, testing and monitoring results through the SDWA O. Reg. 170/03 Section 11 Annual Report, the

Schedule 22 Municipal Summary Report and through the Management Review process outlined in OP-20 Management Review.

In addition, updates regarding sampling, testing and monitoring activities are provided as per the operating agreement and during regular client meetings.

4. Related Documents

Facility Logbook
OP-05 Document and Records Control
OP-06 Drinking Water System
OP-20 Management Review
Laboratory Analysis Reports
Laboratory Chain of Custody Forms
Annual Report (O. Reg. 170 Section 11)
Municipal Summary Report (O. Reg. 170 Schedule 22)
Process Data Management System (PDM)
Emergency Contact List and Essential Supplies & Services List (Contacts section of FEP)
Facility Emergency Plan (FEP) Binder
SOP – Adverse Water Quality (FEP Binder)
SOP – 72 Hour Review (and Weekend Checks)
Monthly Data Sheets
Sampling Schedule/Plan/Calendar/Requirements
SCADA Records

5. Revision History

Date	Revision #	Reason for Revision
2016-06-20	0	Procedure issued.
2018-08-31	1	Procedure updated following new template from Corporate Compliance. QP-07 procedure renamed OP-16. Removed Responsibilities and Scope sections. Updated section 3.1 to reference Municipal Drinking Water License and section 3.2 to reference sampling calendar/plan and removed sampling table. Expanded information related to accredited and licensed laboratories (section 3.3). Reordered some sections and other minor edits.
2019-03-13	2	Clarification on the location of the various assets added to Section 3.4. Updated Section 3.6 with Township of Essa locations and reformatted table. Renamed SOP's related to SCADA review.
2024-01-16	3	Removed reference that sampling results are available to Owner at the Georgian Highlands Regional Office in Wasaga Beach- replaced with "by OCWA". Updated that distribution free chlorine residual is monitored for Angus DWS via a continuous analyzer. Other minor wording grammatical edits.
2025-01-16	4	Procedure updated to accommodate minor wording and grammatical edits. Removed watermark.

MEASUREMENT AND RECORDING EQUIPMENT CALIBRATION AND MAINTENANCE

1. Purpose

To describe the procedure for the calibration and/or verification and maintenance of measurement and recording equipment at the Township of Essa Drinking Water Systems.

2. Definitions

None

3. Procedure

3.1 All measurement and recording equipment calibration and maintenance activities must be performed by appropriately trained and qualified personnel or by a qualified third-party calibration service provider (refer to OP-13 Essential Supplies and Services).

3.2 The Operations Supervisor, Senior Operations Manager and/or designate establishes and maintains a list of measurement and recording devices and associated calibration and/or verification schedules using the automated Work Management System (WMS). When a new device is installed, the WMS Primary, Senior Operations Manager, Operations Supervisor, O&M Team Lead or Asset Management Specialist adds it to the WMS system. The new device is tagged with a unique identification number and the maintenance schedule is set up. Work orders are then automatically generated as per the schedule (refer to OP-15 Infrastructure Maintenance, Rehabilitation and Renewal).

3.3 Details regarding the results of the calibration and/or verification are recorded within each individual work order generated by the WMS.

3.4 Calibration and maintenance activities are carried out in accordance with procedures specified in the manufacturer's manual, instructions specified in WMS.

3.5 Standards, reagents and/or chemicals that may be utilized during calibration and/or verification and/or maintenance activities are verified before use to ensure they are not expired. Any expired standards, reagents and/or chemicals are appropriately disposed of and are replaced with new standards, reagents and/or chemicals as applicable. Additionally, a work order is issued on a monthly basis to ensure that standards, reagents and/or chemicals utilized during calibration and/or verification and/or maintenance within the system are verified.

3.6 Any measurement device which does not meet its specified performance requirements during calibration and/or verification must be removed from service (if practical) until repaired, replaced or successfully calibrated. The failure must be reported to the Operations Management, ORO, OIC on duty and/or PCT as soon as possible so that immediate measures can be taken to ensure that drinking water quality has not been compromised by the malfunctioning device. Any actions taken as a result of the failure

are recorded in the facility logbook. The PCT or designate ensures that any notifications required by applicable legislation are completed and documented within the specified time period.

3.7 Calibration and maintenance records and maintenance/equipment manuals are maintained as per OP-05 Document and Records Control.

4. Related Documents

Facility Logbook
WMS Records
Calibration/Maintenance Records
Maintenance/Equipment Manuals
OP-05 Document and Records Control
OP-13 Essential Supplies and Services
OP-15 Infrastructure Maintenance, Rehabilitation and Renewal

5. Revision History

Date	Revision #	Reason for Revision
2016-06-20	0	Procedure issued.
2018-08-31	1	Procedure updated following new template from Corporate Compliance. QP-08 procedure renamed OP-17. Removed Responsibilities and Scope sections. Added section 3.3 to clarify how calibration and/or verification activities are documented. Added section 3.5 to include how standards, reagents and/or chemicals are verified before use to ensure they are not expired. Other minor edits.
2025-01-16	2	Procedure 3.2 updated- Removed Safety, Process and Compliance Manager and replaced with Operator/Operations Manager/Operations Supervisor - establishes and maintains a list of measurement and recording devices, 3.6 Added on duty OIC to list of those to be notified, removed watermark

1. Purpose

To describe the procedure for maintaining a state of emergency preparedness at the facility level under OCWA's Emergency Management Program.

2. Definitions

Corporate Emergency Response Plan (CERP) – a corporate-level emergency preparedness plan for responding to and supporting serious (Level 3) operations emergencies

Facility Emergency Plan (FEP) – a facility-level emergency preparedness plan for responding to and recovering from operations emergencies

Operations Management – refers to the General Manager, Senior Operations Manager and/or Operations Manager that directly oversees a facility's operations

3. Procedure

3.1 The Facility Emergency Plan (FEP) is the corporate standard for emergency management at OCWA-operated facilities. The FEP supports the facility-level response to and recovery from Level 1, 2 and 3 events related to water and wastewater operations and directly links to the Corporate Emergency Response Plan (CERP) for management of Level 3 events that require corporate support. Operations Management is responsible for establishing a site-specific FEP that meets the corporate standard for this drinking water system.

3.2 OCWA recognizes three levels of events:

Level 1 is an event that can be handled entirely by plant staff and regular contractors. The event and the actions taken to resolve it (and to prevent a reoccurrence, if possible) are then included in regular reporting (both internally and externally). Examples may include response to an operational alarm, first aid incident, small on-site spill, or a process upset that can be easily brought under control.

Level 2 is an event that is more serious and requires immediate notification of others (regulator, owner). Examples may include minor basement flooding, injury to staff that requires medical attention, or a spill that causes or is likely to cause localized, off-site adverse effects. If the event reaches this level, the instructions indicate the need to contact the Regional Hub Manager.

Level 3 is an actual or potential situation that will likely require significant additional resources and/or threatens continued operations. It may require corporate-level support including activation of the OCWA Action Group and opening of an Emergency Operations Centre (EOC) as described in the CERP. Level 3 events usually involve intervention from outside organizations (client, emergency responders, Ministry, media, etc.). Examples may include:

- Disruption of service/inability to meet demand;
- Critical injury including loss of life;
- Breach of security that is a threat to public health;
- Intense media attention;
- Community emergency affecting water supply/treatment;
- Declared pandemic; or
- Catastrophic failure that could impact public health or the environment or cause significant property damage.

3.3 Potential emergency situations or service interruptions identified for the Township of Essa Drinking Water Systems include:

- Unsafe Water
- Spill Response
- Critical Injury
- Critical Shortage of Staff
- Loss of Service
- Security Breach

3.4 The processes for responding to and recovering from each potential emergency situation/service disruption are documented within a site-specific contingency plan (CP). The CPs and related Standard Operating Procedures (SOPs) are contained within the FEP.

3.5 OCWA's training requirements related to the FEP are as follows:

Training Topic	Training Provider	Type of Training	Frequency	Required For
Establishing and maintaining a FEP that meets the corporate standard	Safety, Process and Compliance Manager and/or Corporate Compliance (as required)	On-the-Job Practical	Upon hire and when changes are made to the corporate standard*	PCTs (or others identified by the Operations Management)
Contents of the site-specific FEP	Facility Level (coordinated by QEMS Representative)	On-the-Job Practical	Upon hire and when changes to the FEP are made*	All operations personnel with responsibilities for responding to an emergency

*Note: Changes to the corporate standard or site-specific FEP may only require the change to be communicated to Operations for implementation. Therefore, not all changes will require training.

3.6 At least one CP must be tested each calendar year and each CP must be reviewed at least once in a five-calendar year period. The reviews and tests are recorded on the FEP-01 Contingency Plan Review/Test Summary Form. This record includes the outcomes of the review/test, and identifies any opportunities for improvement and actions taken. A scheduled test of a CP may be regarded as a review of that particular CP as long as the outcomes are evaluated using the FEP-01 form. A CP-related response to an actual event may also be considered a review or a test. A review of the incident including lessons learned should be recorded on FEP-01 following the resolution

of the actual event, along with any opportunities for improvement/actions identified.

3.7 Revisions to the CPs, SOPs and other FEP documents are made (as necessary) following a review, test, actual event or other significant change (e.g., changes in regulatory requirements, corporate policy or operational processes and/or equipment, etc.). Results of the emergency response testing and any opportunities for improvement/actions identified are considered during the Management Review (OP-20).

3.8 Roles and responsibilities for emergency management at OCWA-operated facilities are set out in the FEP. Specific roles and responsibilities related to a particular emergency situation or service interruption (including those of the Owner where applicable) are set out in the relevant site-specific CP. A general description of the respective responsibilities of the Owner and the operating authority in the event an emergency occurs is included in the service agreement with the Owner (as required by the *Safe Drinking Water Act*).

3.9 Where they exist, any relevant sections of the Municipal Emergency Response Plan (MERP) are included or referenced in the appendices section of the FEP. Measures specified in the MERP are incorporated into CPs where appropriate.

3.10 An emergency contact list in conjunction with the essential supplies and services list is contained within the FEP and is reviewed (and updated as required) at least once per calendar year. An emergency communications protocol is contained within the FEP. Specific notification requirements during emergency situations or service interruptions are set out in the individual CPs and in the CERP.

4. Related Documents

Facility Emergency Plan
Corporate Emergency Response Plan
FEP-01 Contingency Plan Review/Test Summary Form
WMS
Municipal Emergency Response Plan (as applicable)
Emergency Contact List/Essential Supplies & Services List (Contacts section of FEP)
OP-20 Management Review

5. Revision History

Date	Revision #	Reason for Revision
2016-06-20	0	Procedure issued.
2018-08-31	1	Procedure updated following new template from Corporate Compliance. QP-09 procedure renamed OP-18. Removed Responsibilities and Scope sections and reordered some sections. Added definition ‘Operations Management’. Throughout procedure replaced ‘Senior Operations Manager’ references with ‘Operations Management’. Removed references to ‘OCWA’s Approach to Facility Emergency Planning’ document throughout procedure and referenced

Date	Revision #	Reason for Revision
		FEP instead. Aligned wording for level 1, 2 & 3 events (section 3.2) with wording in 'OCWA's Emergency Response Plan'. Updated training section to include role of SPC Manager (section 3.5) and expanded testing/review section specifically to clarify how an actual test is documented (section 3.6). Other minor edits.
2024-08-23	2	Procedure updated as follows: Ministry of Environment and Climate Change revised to Ministry, removed watermark. Modified references to Emergency Response Plan to indicate it is now referred to as Corporate Emergency Response Plan (CERP).

1. Purpose

To describe the procedure for conducting internal audits at the facility level that evaluate the conformance of OCWA's Quality & Environmental Management System (QEMS) to the requirements of the Drinking Water Quality Management Standard (DWQMS).

This procedure applies to Internal QEMS Audits conducted for the Township of Essa Drinking Water Systems for the purpose of meeting the DWQMS requirements for internal audits.

Note**:** this procedure does not apply to internal compliance audits conducted in accordance with OCWA's Internal Audit Program.

2. Definitions

Audit Team – one or more Internal Auditors conducting an audit

Internal Auditor – an individual selected to conduct an Internal QEMS Audit

Internal QEMS Audit – a systematic and documented internal verification process that involves objectively obtaining and evaluating documents and processes to determine whether a quality management system conforms to the requirements of the DWQMS

Lead Auditor – Internal Auditor responsible for leading an Audit Team

Non-conformance – non-fulfillment of a DWQMS requirement

Objective Evidence – verifiable information, records or statements of facts. Audit evidence is typically based on interviews, examination of documents, observations of activities and conditions, reviewing results of measurements and tests or other means. Information gathered through interviews should be verified by acquiring supporting information from independent sources.

Opportunity for Improvement (OFI) – an observation about the QEMS that may, in the opinion of the Internal Auditor, offer an opportunity to improve the effectiveness of the system or prevent future problems; implementation of an OFI is optional.

3. Procedure

3.1 Audit Objectives, Scope and Criteria

3.1.1 In general, the objectives of an internal QEMS audit are:

- To evaluate conformance of the implemented QEMS to the requirements of the DWQMS;
- To identify non-conformances with the documented QEMS; and
- To assess the effectiveness of the QEMS and assist in its continual improvement.

3.1.2 The scope of an internal QEMS audit includes activities and processes related to the QEMS as documented in the Operational Plan.

3.1.3 The criteria covered by an internal QEMS audit include:

- Drinking Water Quality Management Standard (DWQMS)
- Current Operational Plan
- QEMS-related documents and records

3.1.4 The audit scope and criteria may be customized as necessary to focus on a particular process/critical control point and/or any elements of the DWQMS which may warrant specific attention. The results of previous internal and external audits should also be considered.

3.2 Audit Frequency

3.2.1 Internal QEMS audits may be scheduled and conducted once every calendar year or may be separated into smaller audit sessions scheduled at various intervals throughout the calendar year. However, all elements of the DWQMS must be audited at least once every calendar year.

3.2.2 The QEMS Representative is responsible for maintaining the internal QEMS audit schedule. The audit schedule may be modified based on previous audit results.

3.2.3 The drinking water system(s) to be audited each calendar year, will be identified and the rationale for choosing the specific facilities will be documented during audit preparation (s. 3.4). At a minimum all drinking water systems described in the Operational Plan will be audited at least once within a 3 year period.

3.3 Internal Auditor Qualifications

3.3.1 Internal QEMS audits shall only be conducted by persons approved by the QEMS Representative and having the following minimum qualifications:

- Internal auditor training or experience in conducting management system audits; and
- Familiarity with the DWQMS requirements.

3.3.2 Internal Auditors that do not meet the qualifications in section 3.3.1 may form part of the Audit Team for training purposes, but cannot act as Lead Auditor.

3.3.3 Internal Auditors must remain objective and, where practical, be independent of the areas/activities being audited. It may not be possible for internal auditors to be fully independent of the activity being audited, but every effort should be made to remove bias and encourage objectivity. Auditors should maintain objectivity throughout the audit process to ensure that the audit findings and conclusions are based only on the audit evidence. Objectivity can be demonstrated by obtaining sufficient appropriate evidence to provide a reasonable basis for the audit findings

3.4 Audit Preparation

3.4.1 Together, the QEMS Representative and the Lead Auditor:

- Establish the audit objectives, scope and criteria;
- Confirm the audit logistics (locations, dates, expected time and duration of audit activities, any health and safety considerations, availability of key personnel, audit team assignments, etc.).

3.4.2 Each Internal Auditor is responsible for:

- Reviewing documentation to prepare for their audit assignments including:
  - the Operational Plan and related procedures;
  - results of previous internal and external QEMS audits;
  - the status and effectiveness of corrective and preventive actions implemented;
  - the results of the management review;
  - the status/consideration of OFIs identified in previous audits; and
  - other relevant documentation.
- Preparing work documents (e.g., checklists, forms, etc.) for reference purposes and for recording objective evidence collected during the audit

3.5 Conducting the Audit

3.5.1 Opening and closing meetings are not required, but may be conducted at the discretion of the QEMS Representative and the Lead Auditor taking into account expectations of Top Management.

3.5.2 The Audit Team gathers and records objective evidence by engaging in activities that may include conducting interviews with Operations Management and staff (in person, over the phone and/or through e-mail), observing operational activities and reviewing documents and records.

3.5.3 The Audit Team generates the audit findings by evaluating the objective evidence against the audit criteria (section 3.1.3). In addition to indicating conformance or non-conformance, the audit findings may also lead to the identification of opportunities for improvement (OFIs). The Lead Auditor is responsible for resolving any differences of opinion among Audit Team members with respect to the audit findings and conclusions.

3.6 Reporting the Results

3.6.1 The Lead Auditor reviews the audit findings and conclusions with the QEMS Representative and Top Management. Other audit participants may also take part in this review as appropriate. This review may take place in person (e.g., during a closing meeting) or through other means (phone call, email, etc.). Any diverging

opinions regarding the audit findings and conclusions should be discussed and, if possible, resolved. If not resolved, this should be noted by the Lead Auditor.

3.6.2 The Lead Auditor submits a written report and/or completed work documents to the QEMS Representative. The submitted documentation must identify (at a minimum):

- Audit objectives, scope and criteria;
- Audit Team member(s) and audit participants;
- Date(s) and location(s) where audit activities where conducted;
- Audit findings including:
    - Related objective evidence for each element;
    - Any non-conformance identified referencing the requirement that was not met; and
    - OFIs or other observations.
- Audit conclusions.

3.6.3 The QEMS Representative distributes the audit results to Top Management and others as appropriate.

3.6.4 The QEMS Representative ensures that results of internal QEMS audits are included as inputs to the Management Review as per OP-20 Management Review.

3.7 Corrective Actions and Opportunities for Improvement (OFIs)

3.7.1 Corrective actions are initiated when non-conformances are identified through internal QEMS audits and are documented and monitored as per OP-21 Continual Improvement.

3.7.2 OFIs are considered, and preventive actions initiated, documented and monitored as per OP-21 Continual Improvement.

3.8 Record-Keeping

3.8.1 Internal QEMS audit records are filed by the QEMS Representative and retained as per OP-05 Document and Records Control.

4. Related Documents

Internal Audit Records (checklists, forms, reports, etc.)
OP-05 Document and Records Control
OP-20 Management Review
OP-21 Continual Improvement
Summary Table of DWQMS Action Items - Township of Essa

5. Revision History

Date	Revision #	Reason for Revision
2016-06-20	0	Procedure issued.
2018-08-31	1	Procedure updated following new template from Corporate Compliance. QP-10 procedure renamed OP-19. Removed Responsibilities and Scope sections and moved scope wording to purpose section. Added definition 'Objective Evidence' and modified 'non-conformance' definition. Replaced 'audit evidence' with 'objective evidence', and 'conformity' with 'conformance' throughout procedure. Replaced 'once every 12 months' with 'once every calendar year' (sections 3.2.1, 3.2.3 and 3.4.1) to reflect wording in DWQMS v. 2.0. Added section 3.2.3 and modified section 3.4.1 to describe the frequency for auditing all Drinking Water Systems covered in multi-facility Operational Plans. Changed section 3.4.2 to include preventive actions, the results of the management review and the status/consideration of OFIs. Included wording 'for each element', and 'identified referencing the requirement that was not met' to section 3.6.2. Moved description of process for corrective actions from QP-10 section 5.7 and OFIs from QP-10 section 5.8 to OP-21. Added section 3.7 to refer to OP-21.
2024-08-23	2	Procedure updated to describe and document how objectivity is maintained when an internal auditor is not fully independent of the activity being audited with additions to 3.3.3. Added section 3.2.3 on which drinking water systems are to be audited each year and audit cycle. Updated related documents to include action items tracking table specific to Essa. Removed watermark.

MANAGEMENT REVIEW

Reviewed by: Process & Compliance Technician	Approved by: Senior Operations Manager

1. Purpose

To describe the procedure for conducting a Management Review of the Quality & Environmental Management System (QEMS) at the facility level.

2. Definitions

Management Review – a formal (documented) meeting conducted at least once every calendar year by Top Management to evaluate the continuing suitability, adequacy and effectiveness of OCWA's Quality & Environmental Management System (QEMS)

Operations Management – refers to the General Manager, Senior Operations Manager and/or Operations Manager that directly oversees a facility's operations

Top Management – a person, persons or group of people at the highest management level within an operating authority that makes decisions respecting the QMS and recommendations to the owner respecting the subject system or subject systems.

OCWA has defined Top Management for the Township of Essa Drinking Water Systems as:

- Senior Operations Management – South Simcoe Hub
- Regional Hub Manager – Georgian Highlands Region
- Safety, Process & Compliance (SPC) Manager – Georgian Highlands Region

3. Procedure

3.1 Top Management ensures that a Management Review is conducted at least once every calendar year. Management Reviews for more than one drinking water system may be conducted at the same meeting provided the systems belong to the same owner and the considerations listed in section 3.4 below are taken into account for each individual system and documented in the Management Review meeting minutes.

3.2 At a minimum, the QEMS Representative, at least one member of Top Management and at least one Operational Staff must attend the Management Review meeting. Other members of Top Management may participate though their attendance is optional.

3.3 Other staff may be invited to attend the Management Review meeting or to assist with presenting information or in reviewing the information presented, where they offer additional expertise regarding the subject matter.

3.4 The standing agenda for Management Review meetings is as follows:

a) Incidents of regulatory non-compliance;
b) Incidents of adverse drinking water tests;
c) Deviations from critical control limits and response actions;
d) The effectiveness of the risk assessment process;

e) Internal and third-party audit results (including any preventive actions implemented to address Opportunities for Improvement (OFI) or rationale as to why OFIs were not implemented);
f) Results of emergency response testing (including any OFIs identified);
g) Operational performance;
h) Raw water supply and drinking water quality trends;
i) Follow-up on action items from previous Management Reviews;
j) The status of management action items identified between reviews;
k) Changes that could affect the QEMS;
l) Consumer feedback;
m) The resources needed to maintain the QEMS;
n) The results of the infrastructure review;
o) Operational Plan currency, content and updates;
p) Staff suggestions; and
q) Consideration of applicable Best Management Practices (BMPs).

3.5 In relation to standing agenda item q), applicable BMPs, if any, to address drinking water system risks discussed during other agenda items, are identified and documented in the Management Review minutes. Review and possible adoption of applicable BMPs are revisited during subsequent Management Reviews and are incorporated into preventive and/or corrective actions as per OP-21 as appropriate.

3.6 The QEMS Representative coordinates the Management Review and distributes the agenda with identified responsibilities to participants in advance of the Management Review meeting along with any related reference materials.

3.7 The Management Review participants review the data presented and make recommendations and/or initiate action to address identified deficiencies as appropriate as per OP-21.

3.8 The QEMS Representative ensures that minutes of and actions resulting from the Management Review meeting are prepared and distributed to the appropriate OCWA Top Management and Operations personnel, and the Corporation of the Township of Essa.

3.9 The QEMS Representative monitors the progress and documents the completion of actions resulting from the Management Review.

4. Related Documents

Management Review Reference Materials
Minutes and actions resulting from the Management Review
OP-21 Continual Improvement

5. Revision History

Date	Revision #	Reason for Revision
2016-06-20	0	Procedure issued.
2018-08-31	1	Procedure updated following new template from Corporate Compliance. Removed Responsibilities and Scope sections. Added definitions for Top Management and Operations Management. Revisions based on new requirements of the Standard; at least once every 12 months changed to once every calendar year (section 3.1) and efficacy changed to effectiveness (section 3.4). Added sections 3.2 and 3.3 to describe who is participating in the Management Review process. Added clarification on including any preventive actions implemented to address Opportunities for Improvement (OFI) or rationale as to why OFIs were not implemented when reviewing audit results (section 3.4.e). Added Best Management Practices (BMPs) as a standing agenda item (section 3.4.q). Added section 3.5 to include consideration of BMPs and link OP-20 to OP-21 Continual Improvement.
2025-01-16	2	Procedure reviewed and updated with minor wording changes. Removed watermark.

1. Purpose

To describe the procedure for tracking and measuring continual improvement of the Quality & Environmental Management System (QEMS) for the Township of Essa Drinking Water Systems.

2. Definitions

Continual Improvement - recurring activity to enhance performance *(ISO 14001:2014)*

Corrective Action – action to eliminate the cause of detected nonconformity of the QMS with the requirements of the DWQMS or other undesirable situation

Non-conformance – the non-fulfilment of a DWQMS requirement

Preventive Action – action to prevent the occurrence of nonconformity of the QMS with the requirements of the DWQMS or other undesirable situation

3. Procedure

3.1 OCWA strives to continually improve the effectiveness of its QEMS for this drinking water system(s) through the identification and implementation of corrective/preventive actions and, as appropriate, through review and consideration of applicable Best Management Practices (BMPs).

3.2 Corrective Actions

3.2.1 Non-conformances may be identified through an internal or external QEMS audit(s) conducted for this drinking water system. They may also be identified as a result of other events such as:

- an incident/emergency;
- community/Owner complaint;
- other reviews; and
- operational checks, inspections or audits.

3.2.2 The QEMS Representative (in consultation with Operations Management and/or the SPC Manager) investigates the need for a corrective action to eliminate the root cause(s) so as to prevent the non-conformance from recurring. The investigation may also include input from the operators and other stakeholders and the consideration of BMPs as appropriate.

3.2.3 The QEMS Representative determines the corrective action needed based on this consultation. The Operations Management (or designate) assigns responsibility and a target date for resolution.

3.2.4 The QEMS Representative ensures corrective actions are documented using the Summary Table of DWQMS Action Items- Township of Essa. The QEMS Representative monitors the progress of corrective action(s) and provides status updates to Top Management.

3.2.5 The implementation and effectiveness of corrective actions are verified during subsequent internal QEMS audits and are considered during the Management Review. If there is evidence that the action taken was not effective, the Operations Management (or designate) initiates further corrective action and assigns resources as appropriate until the non-conformance is fully resolved.

3.3 Preventive Actions

3.3.1 Potential preventive actions may be identified through an internal or external QEMS audit as Opportunities For Improvement (OFIs), during the Management Review or through other means such as:

- staff/Owner suggestions;
- regulator observations;
- evaluation of incidents/emergency response/tests;
- the analysis of facility/Regional Hub or OCWA-wide data/trends;
- non-conformances identified at other drinking water systems; or
- a result of considering a BMP.

3.3.2 The QEMS Representative (in consultation with Operations Management and/or the SPC Manager) considers whether a preventive action is necessary. The review may also include input from the operators and other stakeholders and the consideration of BMPs as appropriate.

3.3.3 If it is decided that a preventive action is necessary, the QEMS Representative determines the action to be taken based on this consultation and the Operations Management (or designate) assigns responsibility and a target date for implementation.

3.3.4 The implementation of preventive actions is tracked by the QEMS Representative using the “Summary Table of DWQMS Actions Items- Township of Essa”.

3.3.5 The implementation and effectiveness of preventive actions are verified during subsequent internal QEMS audits and are considered during the Management Review. If there is evidence that the action taken was not effective, the Operations Management (or designate) may consider further preventive actions and assigns resources as appropriate.

3.4 The QEMS Representative and Operations Management monitor corrective/preventive actions on an ongoing basis and review the status and effectiveness of the actions during subsequent Management Review meetings.

3.5 Best Management Practices (BMPs)

3.5.1 The QEMS Representative and/or Operations Management in consultation with the SPC Manager will review and consider applicable internal and/or external BMPs identified by internal and/or external sources as part of the Management Review (OP-20) and in the corrective and preventive action processes described above.

3.5.2 BMPs may include, but are not limited to:

- Facility/Regional Hub practices developed and adopted as a result of changes to legislative or regulatory requirements, trends from audit findings or drinking water system performance trends;
- OCWA-wide BMPs/guidance or recommended actions;
- Drinking water industry based standards/BMPs or recommendations; or
- Those published by the Ministry.

3.5.3 At a minimum, applicable BMPs must be reviewed and considered once every 36 months.

4. Related Documents

OP-05 Document and Records Control
OP-20 Management Review
Management Review Minutes
Internal Audit Records
External Audit Records
Summary Table of DWQMS Actions Items- Township of Essa.

5. Revision History

Date	Revision #	Reason for Revision
2018-08-31	0	Procedure issued – Information within OP-21 was originally set out in the Main Body of OCWA's Operational Plan (last revision 5 dated 2016-06-27). Information from QP-10 Internal Audit (section 5.7 and section 5.8) was incorporated into section 3.2 and section 3.3 of OP-21 but was modified to address non-conformances identified from additional inputs other than internal audits and preventive actions resulting from means other than OFIs from internal audits. Roles and responsibilities were revised to include the SPC Manager, and to clarify the role of the QEMS Representative in investigating and determining corrective and preventive actions needed. A section on Best Management Practices (section 3.5) was added to meet the new requirements of DWQMS v. 2.0.
2024-01-16	1	Removed reference to the "Implementation Action Plan" form/table" and updated it to the Summary Table of DWQMS Actions Items- Township of Essa.

CONTINUAL IMPROVEMENT

Reviewed by: Process & Compliance Technician	Approved by: Senior Operations Manager

Date	Revision #	Reason for Revision
2025-01-16	2	Procedure updated. Minor spelling and formatting changes. Updated MECP to Ministry. Removed watermark. Added External Audit records to related documents